SECTION AV

AUDIO, VISUAL & TELEPHONE SYSTEM

CONTENTS

PRECAUTIONS **3**
Precautions for Supplemental Restraint System (SRS) “AIR BAG” and “SEAT BELT PRE-TENSIONER” 3
PREPARATION **4**
Commercial Service Tools 4
AUDIO **5**
System Description 5
Component Parts Location 6
Wiring Diagram —AUDIO— 7
WITHOUT NAVI 7
WITH NAVI 9
Terminals and Reference Value for Audio Unit 11
Trouble Diagnoses 12
AUDIO UNIT 12
Inspection 12
AUDIO UNIT 12
ANTENNA 12
Removal and Installation of Audio Unit (Without NAVI) 13
REMOVAL 13
INSTALLATION 13
Removal and Installation of Audio Unit (With NAVI).. 13
REMOVAL 13
INSTALLATION 13
Removal and Installation of Speaker 13
REMOVAL 13
INSTALLATION 13
Removal and Installation of Tweeter 14
REMOVAL 14
INSTALLATION 14
AUDIO ANTENNA **15**
Antenna Route 15
Removal and Installation of Roof Antenna 15
NAVIGATION SYSTEM **16**
System Description 16
NAVIGATION SYSTEM 16
Component Description 19
NAVI CONTROL UNIT 19
GPS ANTENNA 19
DISPLAY 20
NAVI SWITCH 20
TRANSFER UNIT 20
VOICE CHANGE RELAY 20
Precautions for NAVI Control Unit Replacement ... 21
Component Parts And Harness Connector Location ... 21
Schematic 22
Wiring Diagram — NAVI — 23
Terminals and Reference Value for NAVI Control Unit 27
Terminals and Reference Value for Display 29
Terminals and Reference Value for NAVI Switch ... 31
Terminals and Reference Value for Transfer Unit... 31
Terminals and Reference Value for Voice Change Relay 32
Self-Diagnosis Function 34
DESCRIPTION 34
DIAGNOSIS ITEM 34
Self-Diagnosis Mode 35
OPERATION PROCEDURE 35
SELF–DIAGNOSIS RESULT 36
CONFIRMATION/ADJUSTMENT Mode 37
OPERATION PROCEDURE 37
DISPLAY 38
VEHICLE SIGNALS 39
HISTORY OF ERRORS 39
NAVIGATION 42
Communication Line Check (Between NAVI Control Unit and Transfer Unit) 43
Vehicle Speed Signal Check 44
Illumination Signal Check 45
Ignition Signal Check 45
Reverse Signal Check 46
RGB Image Is Not Displayed 46
RGB Screen Is Rolling 47
Color of RGB Image Is Not Proper 48
Guide Sound Is Not Heard 50
NAVI Switch Cannot Be Operated 52
Example of Symptoms Judged Not Malfunction 54

BASIC OPERATIONS 54
VEHICLE MARKS 54
MAP DVD-ROM 55
DESTINATION, WAY POINTS OR MENU CONTENTS CANNOT BE CHOSEN OR SET 55
VOICE GUIDANCE 55
ROUTE CALCULATION 56
EXAMPLES OF VEHICLE MARK DISPLACEMENT 57
VEHICLE MARK SHOWS A POSITION WHICH IS COMPLETELY WRONG 60
VEHICLE MARK JUMPS 60
VEHICLE MARK IS IN A RIVER OR SEA 61
VEHICLE MARK AUTOMATICALLY ROTATES... 61
WHEN DRIVING ON SAME ROAD, SOMETIMES VEHICLE MARK IS IN RIGHT PLACE AND SOMETIMES IT IS WRONG PLACE 61
LOCATION CORRECTION BY MAP-MATCHING IS SLOW 61
ALTHOUGH GPS RECEIVING DISPLAY IS GREEN, VEHICLE MARK DOES NOT RETURN TO CORRECT LOCATION 61
NAME OF CURRENT PLACE IS NOT DISPLAYED 61
CONTENTS OF DISPLAY DIFFER FOR BIRD-VIEW® AND THE (FLAT) MAP SCREEN 61
Program Loading 62
Removal and Installation of NAVI Control Unit 63
REMOVAL 63
INSTALLATION 63
Removal and Installation of GPS Antenna 63
REMOVAL 63
INSTALLATION 63
Removal and Installation of GPS Antenna Feeder... 64
REMOVAL 64
INSTALLATION 64
Removal and Installation of NAVI Switch 65
REMOVAL 65
INSTALLATION 65
Removal and Installation of Display 65
REMOVAL 65
INSTALLATION 65
Removal and Installation of Transfer Unit 66
REMOVAL 66
INSTALLATION 66
Removal and Installation of Voice Change Relay ... 66
REMOVAL 66
INSTALLATION 66

PRECAUTIONS

PFP:00011

Precautions for Supplemental Restraint System (SRS) “AIR BAG” and “SEAT BELT PRE-TENSIONER”

AKS00BEC

The Supplemental Restraint System such as “AIR BAG” and “SEAT BELT PRE-TENSIONER”, used along with a front seat belt, helps to reduce the risk or severity of injury to the driver and front passenger for certain types of collision. Information necessary to service the system safely is included in the SRS and SB section of this Service Manual.

WARNING:

- **To avoid rendering the SRS inoperative, which could increase the risk of personal injury or death in the event of a collision which would result in air bag inflation, all maintenance must be performed by an authorized NISSAN/INFINITI dealer.**
- **Improper maintenance, including incorrect removal and installation of the SRS, can lead to personal injury caused by unintentional activation of the system. For removal of Spiral Cable and Air Bag Module, see the SRS section.**
- **Do not use electrical test equipment on any circuit related to the SRS unless instructed to in this Service Manual. SRS wiring harnesses can be identified by yellow and/or orange harnesses or harness connectors.**

PREPARATION

PFP:00002

Commercial Service Tools

AKS00BVB

Tool name	Description
Power tool 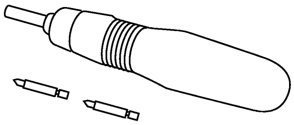 PBIC0191E	Loosening bolts and nuts

AUDIO

PFP:28111

System Description

AKS00F9B

Refer to Owner's Manual for audio system operating instructions.
Power is supplied at all times

- through 15A fuse [No. 32, located in the fuse and fusible link box]
- to audio unit terminal 6.

With the ignition switch in the ACC or ON position, power is supplied

- through 10A fuse [No. 4, located in the fuse block (J/B)]
- to audio unit terminal 10.

Ground is supplied through the case of the audio unit.
When audio switch is pushed, audio signals are supplied

- through audio unit terminals 1, 2, 3, 4, 13, 14, 15, and 16
- to terminals 1 and 2 of front door speaker LH and RH
- to terminals 1 and 2 of rear speaker LH and RH
- to terminals 1 and 2 of tweeter LH and RH.

Component Parts Location

AKS00F9C

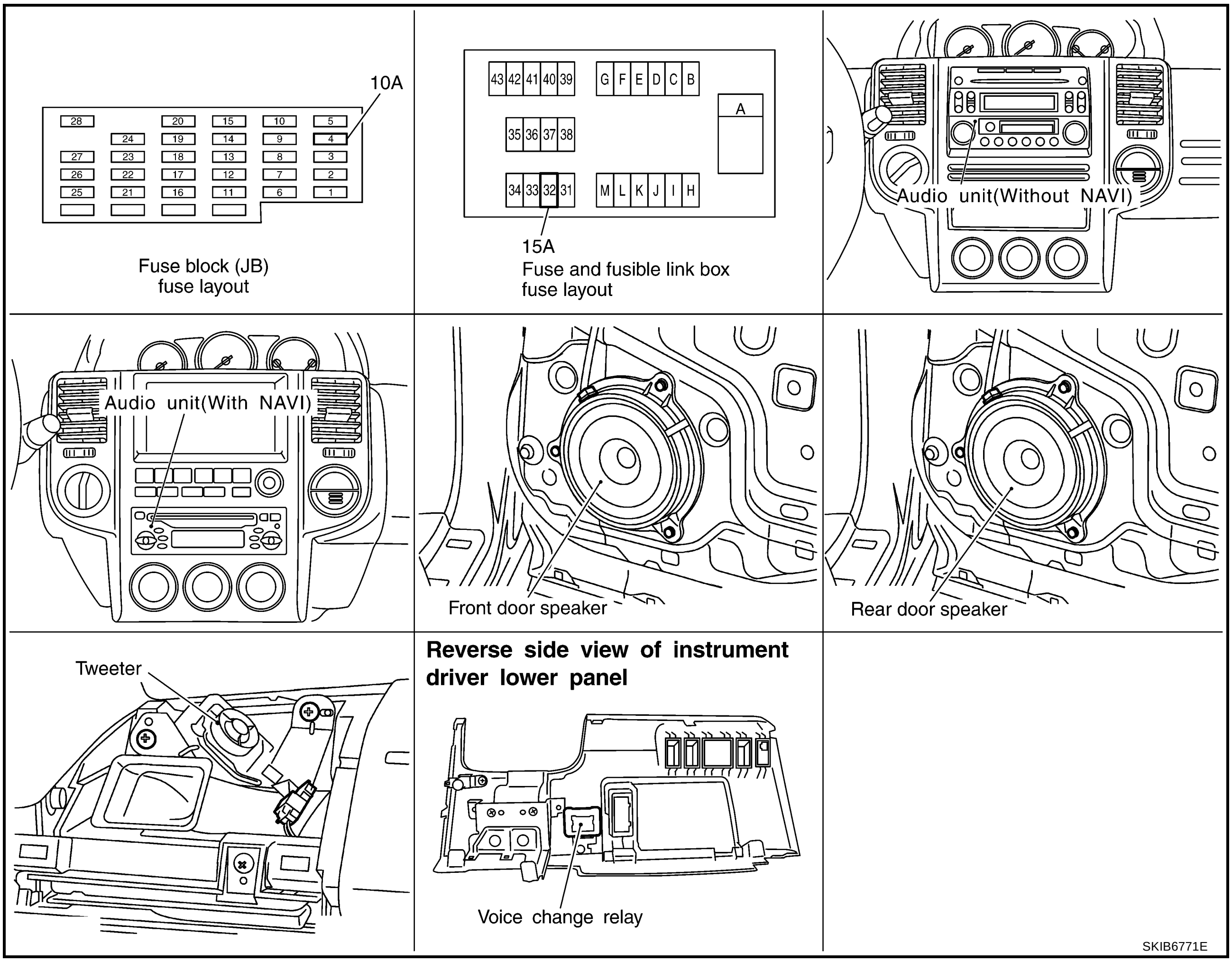

Wiring Diagram —AUDIO—

AKS00F9D

WITHOUT NAVI

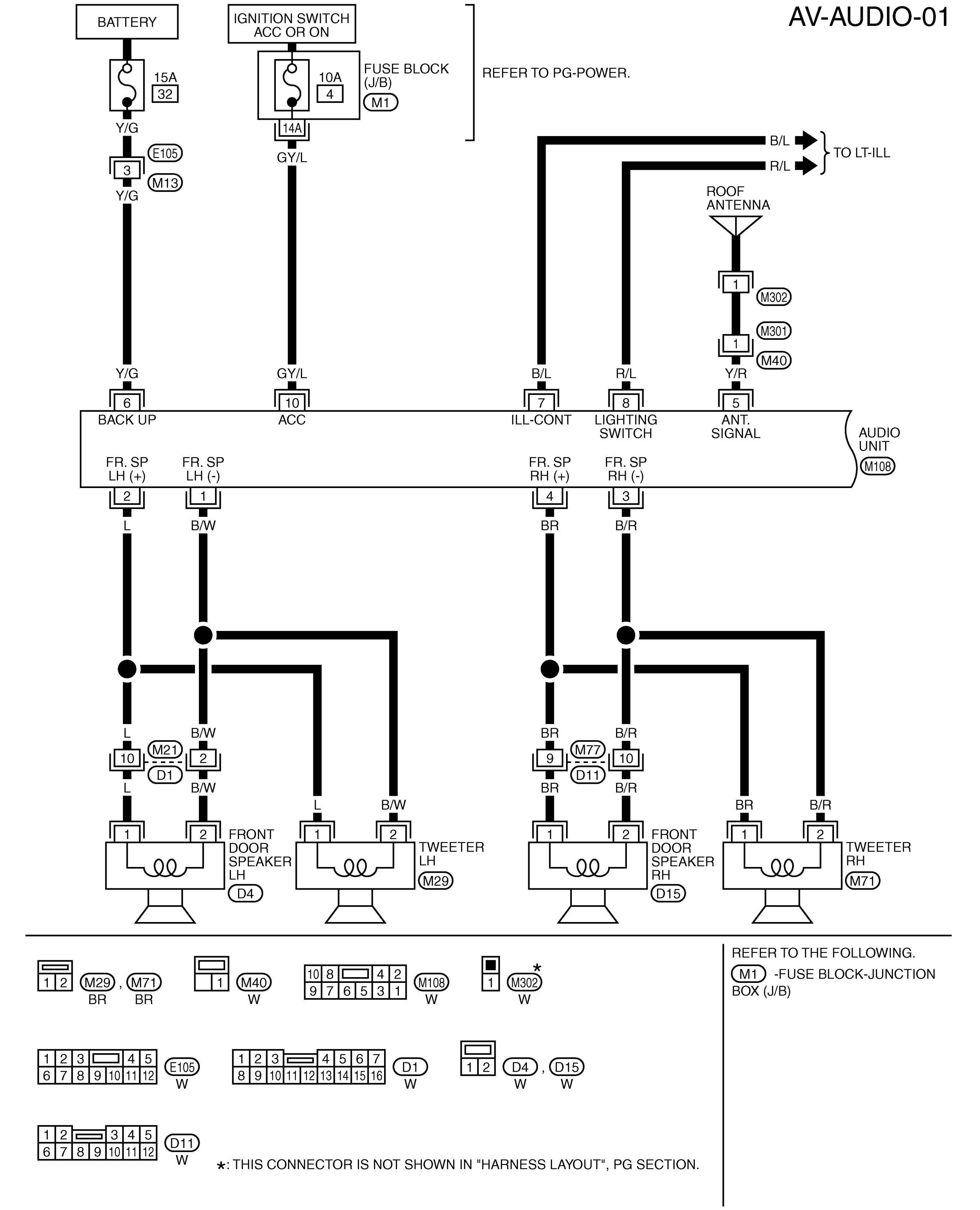

TKWB2266E

AV-AUDIO-02

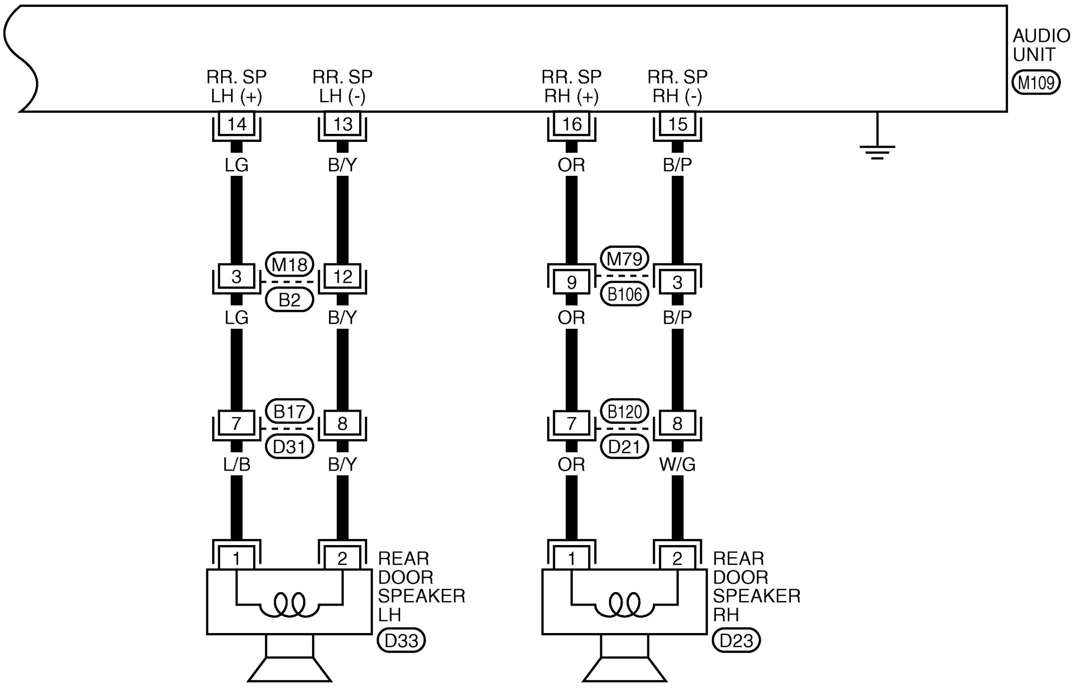

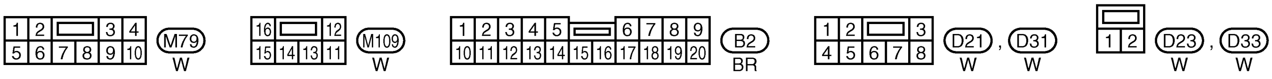

TKWB0201E

WITH NAVI

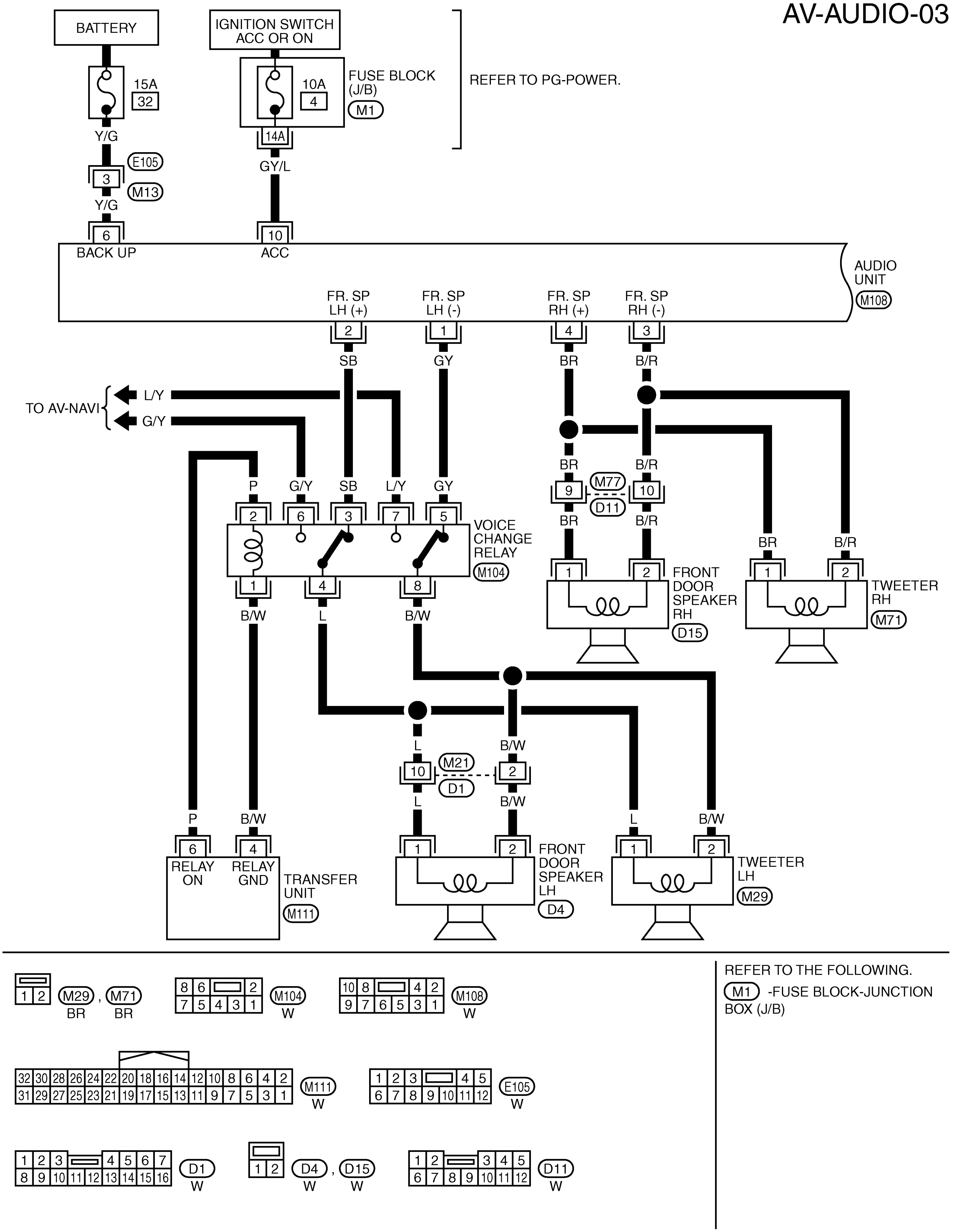
AV-AUDIO-03
BATTERY
IGNITION SWITCH ACC OR ON
15A
32
10A
4
FUSE BLOCK (J/B)
M1
REFER TO PG-POWER.
14A
Y/G
GY/L
E105
3
M13
Y/G
6
BACK UP
10
ACC
AUDIO UNIT
M108
FR. SP LH (+)
FR. SP LH (-)
FR. SP RH (+)
FR. SP RH (-)
2
1
4
3
SB
GY
BR
B/R
TO AV-NAVI
L/Y
G/Y
P
G/Y
SB
L/Y
GY
BR
B/R
9
M77
10
D11
BR
B/R
VOICE CHANGE RELAY
M104
2
6
3
7
5
1
4
8
B/W
L
B/W
BR
B/R
FRONT DOOR SPEAKER RH
D15
TWEETER RH
M71
L
B/W
10
M21
2
D1
L
B/W
P
B/W
L
B/W
6
4
RELAY ON
RELAY GND
TRANSFER UNIT
M111
FRONT DOOR SPEAKER LH
D4
TWEETER LH
M29
M29, M71
BR BR
M104
W
M108
W
M111
W
E105
W
D1
W
D4, D15
W W
D11
W
REFER TO THE FOLLOWING.
M1 -FUSE BLOCK-JUNCTION BOX (J/B)
TKWB2267E

AV-AUDIO-04

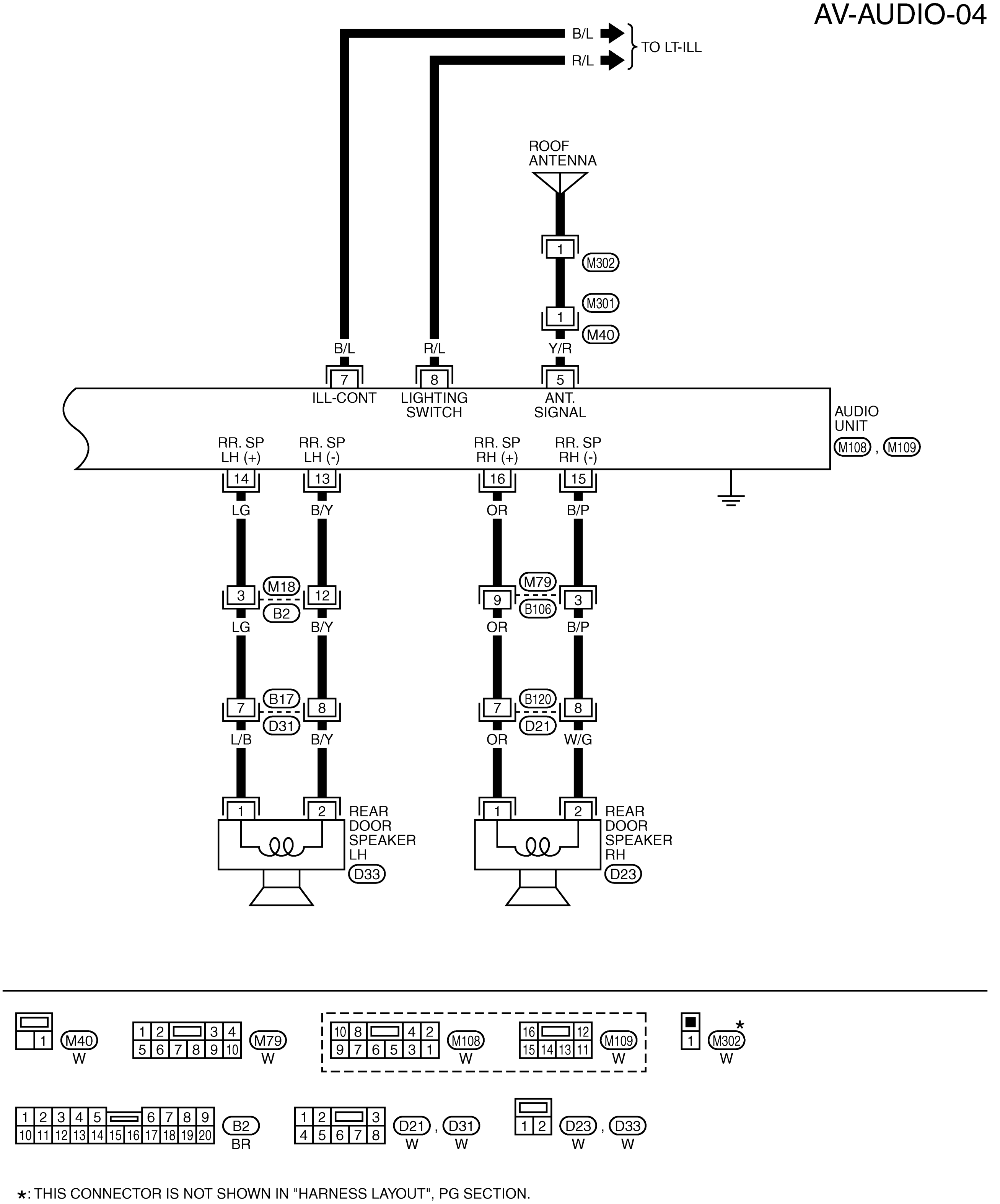

*: THIS CONNECTOR IS NOT SHOWN IN "HARNESS LAYOUT", PG SECTION.

TKWB2268E

Terminals and Reference Value for Audio Unit

AKS00F9G

Terminal (Wire color)		Item	Signal input/ output	Condition		Reference value
(+)	(–)			Ignition switch	Operation	
2 (L)*1 (SB)*2	1 (B/W)*1 (GY)*2	Audio signal front LH	Output	ON	Receive audio signal	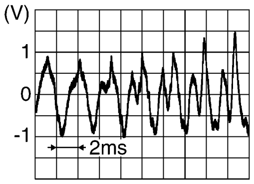 SKIB3609E
4 (BR)	3 (B/R)	Audio signal front RH	Output	ON	Receive audio signal	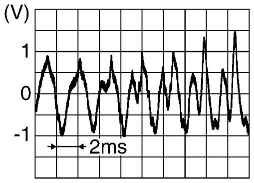 SKIB3609E
5 (Y/R)	Ground	Antenna signal	Output	ON	—	Approx. 12 V
6 (Y/G)	Ground	Battery power supply	Input	OFF	—	Battery voltage
7 (B/L)	Ground	Illmination control signal	Input	OFF	Illmination control switch is operated by lighting switch in ON position	Changes between approx. 0 V and approx. 12 V
8 (R/L)	Ground	Lighting switch signal	Input	OFF	Lighting switch position 1st or 2nd.	Approx.12 V
					Lighting switch position OFF	Approx. 0 V
10 (GY/L)	Ground	ACC power supply	Input	ACC	—	Battery voltage
14 (LG)	13 (B/Y)	Audio signal rear LH	Output	ON	Receive audio signal	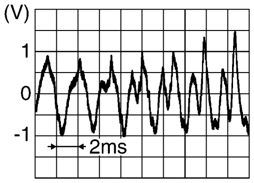 SKIB3609E
16 (OR)	15 (B/P)	Audio signal rear RH	Output	ON	Receive audio signal	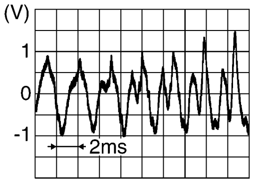 SKIB3609E

*1: Without NAVI
*2: With NAVI

Trouble Diagnoses

AKS00F9J

AUDIO UNIT

Symptom	Possible causes	Repair order
Audio unit inoperative (no digital display and no sound from speakers).	1. 10A fuse 2. 15A fuse 3. Audio unit ground 4. Audio unit	1. Check 10A fuse [No. 4, located in fuse block (J/B)]. Turn ignition switch ON and verify that battery positive voltage is present at terminal 10 of audio unit. 2. Check 15A fuse (No. 32, located in fuse and fusible link box) and verify that battery positive voltage is present at terminal 6 of audio unit. 3. Check audio unit ground. 4. Remove audio unit for repair.
Individual rear speaker is noisy or inoperative.	1. Each speaker 2. Output circuit to each speaker	1. Check speaker. 2. Check the output circuits to each speaker between audio unit and each speaker.
AM/FM stations are weak or noisy.	1. Roof antenna 2. Audio unit ground 3. Audio unit	1. Check roof antenna. 2. Check audio unit ground condition. 3. Remove audio unit for repair.
Audio unit generates noise in AM and FM modes with engine running.	1. Poor audio unit ground 2. Loose or missing ground bonding straps 3. Ignition condenser or rear window defogger noise suppressor condenser 4. Ignition coil 5. Audio unit	1. Check audio unit ground. 2. Check ground bonding straps. 3. Replace ignition condenser or rear window defogger noise suppressor condenser. 4. Check ignition coil. 5. Remove audio unit for repair.
Audio unit generates noise in AM and FM modes with accessories on (switch pops and motor noise).	1. Poor audio unit ground 2. Antenna 3. Accessory ground 4. Malfunctioning accessory	1. Check audio unit ground. 2. Check antenna. 3. Check accessory ground. 4. Replace accessory.

Inspection

AKS00F9K

AUDIO UNIT

All voltage inspections are made with:

- Ignition switch ON or ACC
- Audio unit ON
- Audio unit connected

ANTENNA

Using a jumper wire, clip an auxiliary ground between antenna and body.

- If reception improves, check antenna ground (at body surface).
- If reception does not improve, check main feeder cable for short circuit or open circuit.

Removal and Installation of Audio Unit (Without NAVI)

AKS00F9O

REMOVAL

1. Remove instrument cluster lid C. Refer to IP-11, "Removal and Installation" .
2. Remove screws and connectors, and remove audio unit.

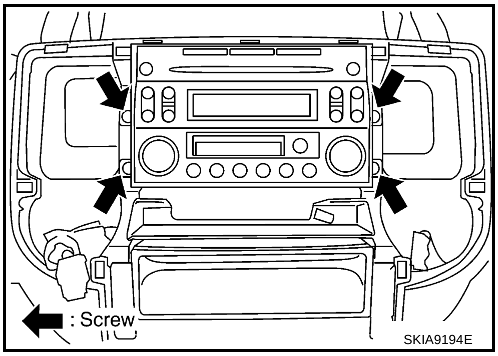

3. Remove screws and brackets.

INSTALLATION

Installation is the reverse order of removal.

Removal and Installation of Audio Unit (With NAVI)

AKS00F9P

REMOVAL

1. Remove instrument cluster lid C. Refer to IP-11, "Removal and Installation" .
2. Remove screws and connectors, remove audio unit.

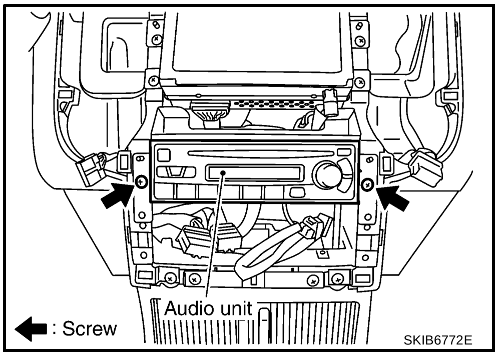

3. Remove screws, and brackets.

INSTALLATION

Installation is the reverse order of removal.

Removal and Installation of Speaker

AKS00F9Q

REMOVAL

1. Remove door finisher. Refer to EI-32, "Removal and Installation" .
2. Remove screws and remove speaker.

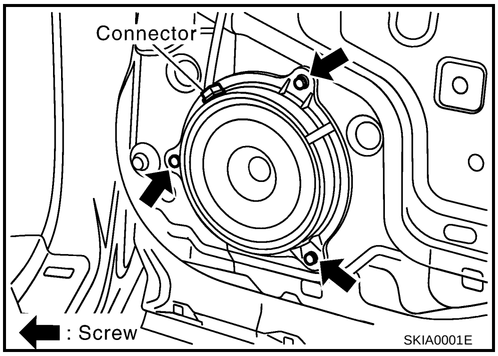

INSTALLATION

Installation is the reverse order of removal.

Removal and Installation of Tweeter

AKS00F9R

REMOVAL

1. Remove front speaker grille. Refer to IP-11, "Removal and Installation" .
2. Remove screws and remove tweeter.

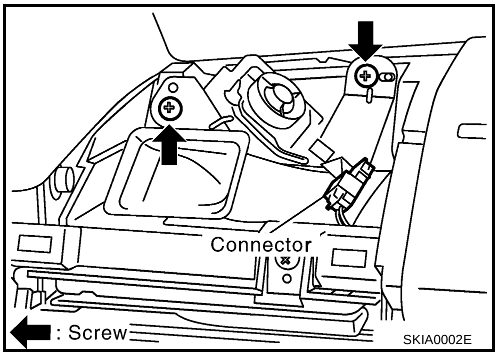

INSTALLATION

Installation is the reverse order of removal.

AUDIO ANTENNA

PFP:28200

Antenna Route

AKS00F9S

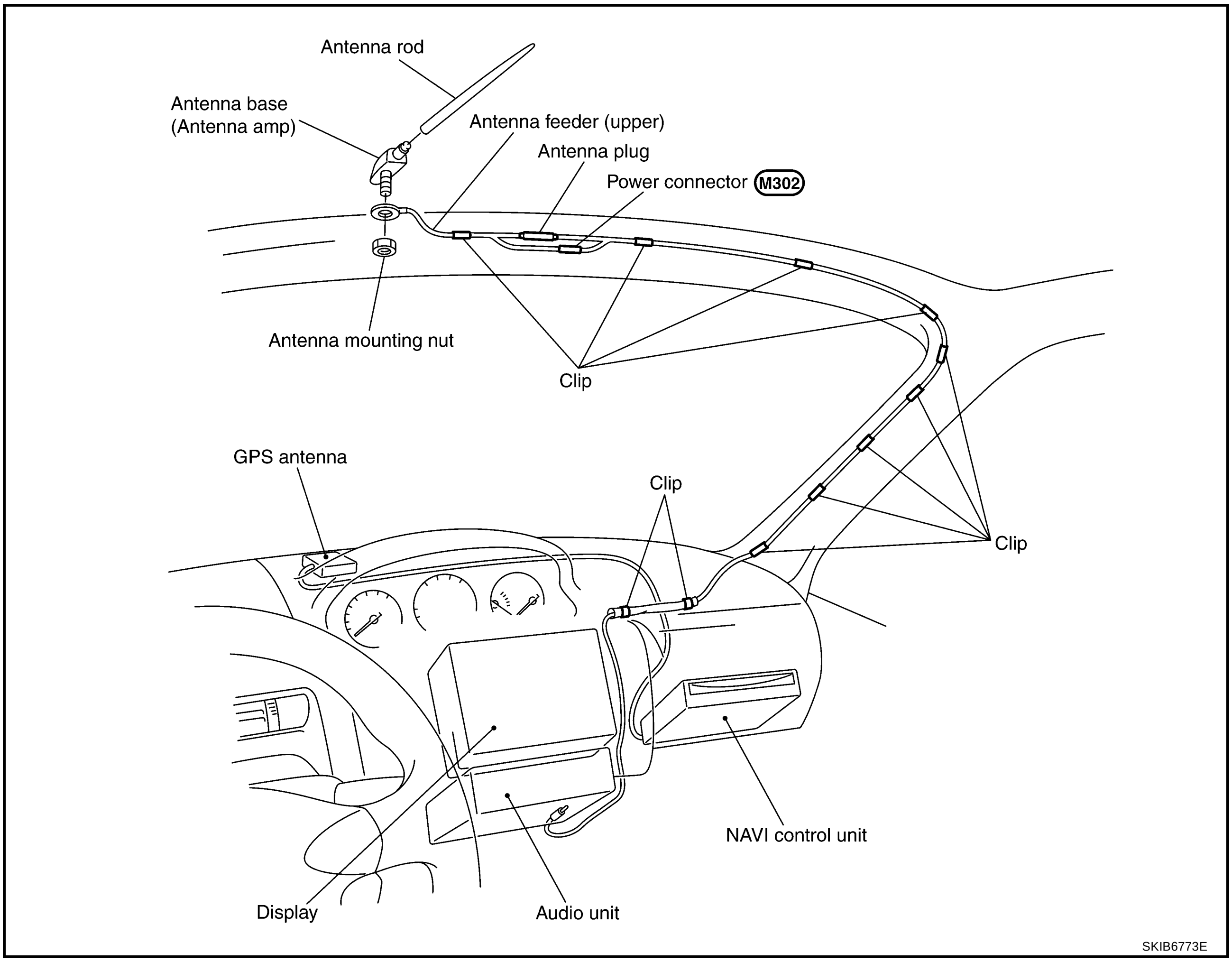

SKIB6773E

Removal and Installation of Roof Antenna

AKS00F9T

1. Remove headlining.
   - Refer to EI-40, "Removal and Installation" in "Exterior/Interior (EI)" section.
2. Remove roof antenna mounting nut, antenna plug, and power connector. Then remove roof antenna.

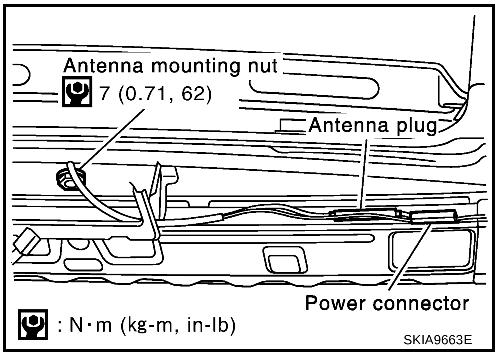

SKIA9663E

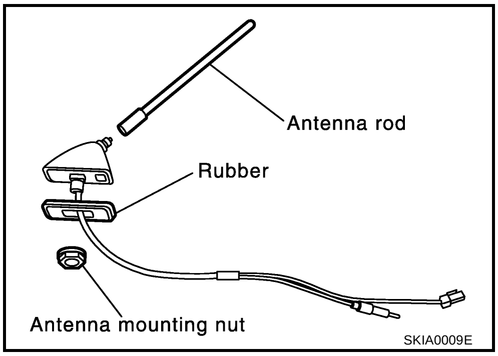

SKIA0009E

NAVIGATION SYSTEM

PFP:25915

System Description

AKS00F7M

NAVIGATION SYSTEM

For details of navigation system operation procedure, refer to navigation system owner's manual.

Location Detection Principle

The navigation system periodically calculates the vehicle's current position according to the following three signals:

- Travel distance of the vehicle as determined by the vehicle speed sensor
- Turning angle of the vehicle as determined by the gyroscope (angular velocity sensor)
- Direction of vehicle travel as determined by the GPS antenna (GPS information)

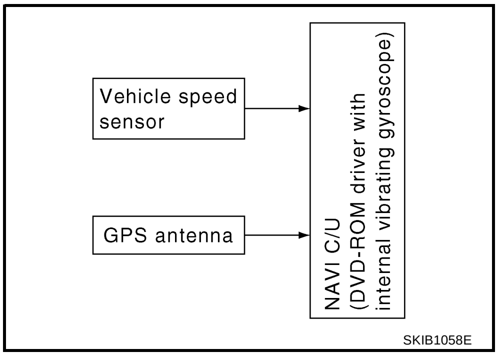

The current position of the vehicle is then identified by comparing the calculated vehicle position with map data read from the map DVD-ROM, which is stored in the DVD-ROM drive (map-matching), and indicated on the screen as a vehicle mark. More accurate data is judged and used by comparing vehicle position detection results found by the GPS with the result by map-matching.

The current vehicle position will be calculated by detecting the distance the vehicle moved from the previous calculation point and its direction.

- Travel distance
  Travel distance calculations are based on the vehicle speed sensor input signal. Therefore, the calculation may become incorrect as the tires wear down. To prevent this, an automatic distance correction function has been adopted.
- Travel direction
  Change in the travel direction of the vehicle is calculated by a gyroscope (angular velocity sensor) and a GPS antenna (GPS information). They have both advantages and disadvantages.

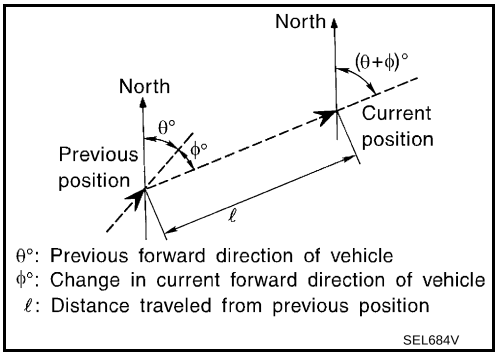

Type	Advantage	Disadvantage
Gyroscope (angular velocity sensor)	Can detect the vehicle's turning angle quite accurately.	Direction errors may accumulate when vehicle is driven for long distances without stopping.
GPS antenna (GPS information)	Can detect the vehicle's travel direction (North/South/East/West).	Correct direction cannot be detected when vehicle speed is low.

More accurate traveling direction is detected because priorities are set for the signals from these two devices according to the situation.

Map-Matching

Map-matching compares a current location detected by the method in the “Location Detection Principle“ (refer to AV-16) with a road map data from Map DVD-ROM stored in DVD-ROM drive.

NOTE:
The road map data is based on data stored in the map DVD-ROM.

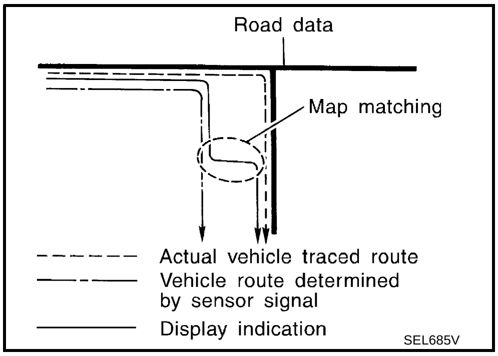

SEL685V

The vehicle position may not be corrected under the following circumstances and after driving for a certain time when GPS information is difficult to receive. In this case, the vehicle mark on the display must be corrected manually.

- In map-matching, alternative routes to reach the destination will be shown and prioritized, after the road on which the vehicle is currently driven has been judged and the vehicle mark has been repositioned.
  If there is an error in distance and/or direction, alternative routes will be shown in different order of priority, and the incorrect road can be avoided.
  If two roads are running in parallel, they are of the same priority. Therefore, the vehicle mark may appear on either of them alternately, depending on maneuvering of the steering wheel and configuration of the road.

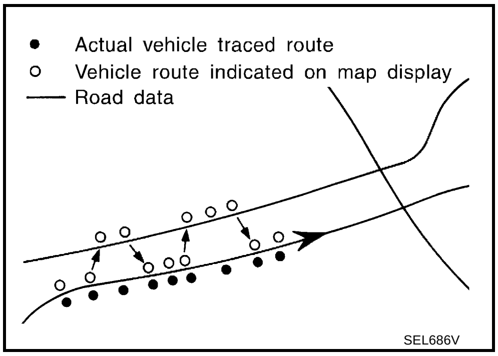

SEL686V

- Map-matching does not function correctly when a road on which the vehicle is driving is new and not recorded in the map DVD-ROM, or when road pattern stored in the map data and the actual road pattern are different due to repair.
  When driving on a road not present in the map, the map-matching function may find another road and position the vehicle mark on it. Then, when the correct road is detected, the vehicle mark may change to it.
- Effective range for comparing the vehicle position and travel direction calculated by the distance and direction with the road data read from the map DVD-ROM is limited. Therefore, when there is an excessive gap between current vehicle position and the position on the map, correction by map-matching is not possible.

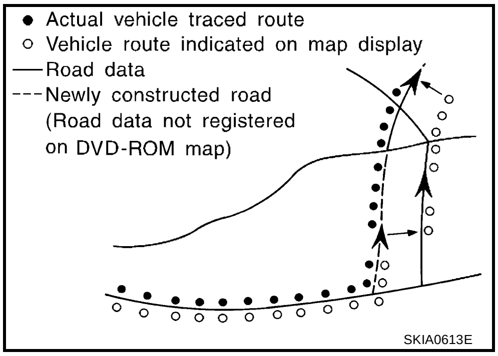

SKIA0613E

GPS (Global Positioning System)

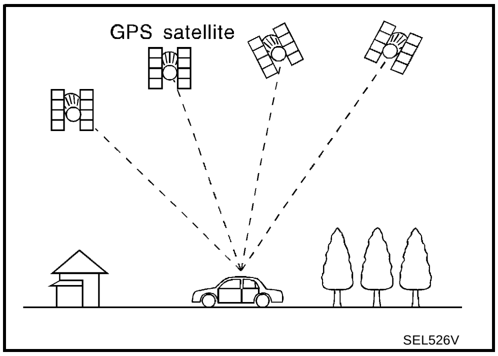

GPS (Global Positioning System) was developed for and is controlled by the US Department of Defense. The system utilizes GPS satellites (NAVSTAR), sending out radio waves while flying on an orbit around the earth at an altitude of approximately 21,000 km.

The GPS receiver calculates the vehicle's position in three dimensions (latitude/longitude/altitude) according to the time lag of the radio waves received from four or more GPS satellites (three-dimensional positioning). If radio waves were received only from three GPS satellites, the GPS receiver calculates the vehicle's position in two dimensions (latitude/longitude), utilizing the altitude data calculated previously with radio waves from four or more GPS satellites (two-dimensional positioning).

Position correction by GPS is not available while the vehicle is stopped.

Accuracy of GPS will deteriorate under the following conditions:

- In two-dimensional positioning, GPS accuracy will deteriorate when altitude of the vehicle position changes.
- The accuracy can be even lower depending on the arrangement of the GPS satellites utilized for the positioning.
- Position detection is not possible when vehicle is in an area where radio waves from the GPS satellite do not reach, such as in a tunnel, parking lot in a building, and under an elevated highway. Radio waves from the GPS satellites may not be received when some object is located over the GPS antenna.

NOTE:

- Even a high-precision three dimensional positioning, the detection result has an error about 10 m (30 ft).
- Because the signals of GPS satellite is controlled by the Tracking and Control Center in the United States, the accuracy may be degraded lower intentionally or the radio waves may stop.

Component Description

AKS00F7N

NAVI CONTROL UNIT

- NAVI control unit includes the gyroscope (angular velocity sensor), the GPS tuner, and the DVD-ROM drive, and controls the navigation function.
- It calculates the vehicle location according to the signals from the gyroscope, the vehicle speed sensor, the GPS satellite and the data of map DVD-ROM, and then transmits the map image signal to the display.
- It transmits the operation signal from the display to NAVI control unit via the communication line.

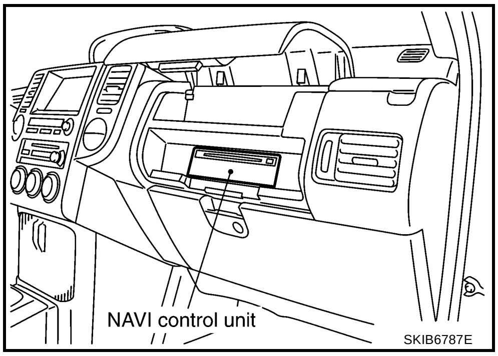

GPS ANTENNA

The GPS antenna receives and amplifies the radio waves from the GPS satellites, and then transmits the GPS signal to NAVI control unit.

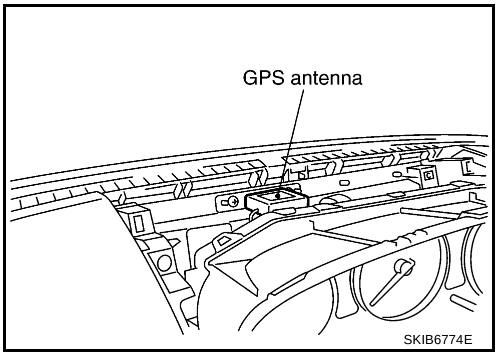

Antenna Route

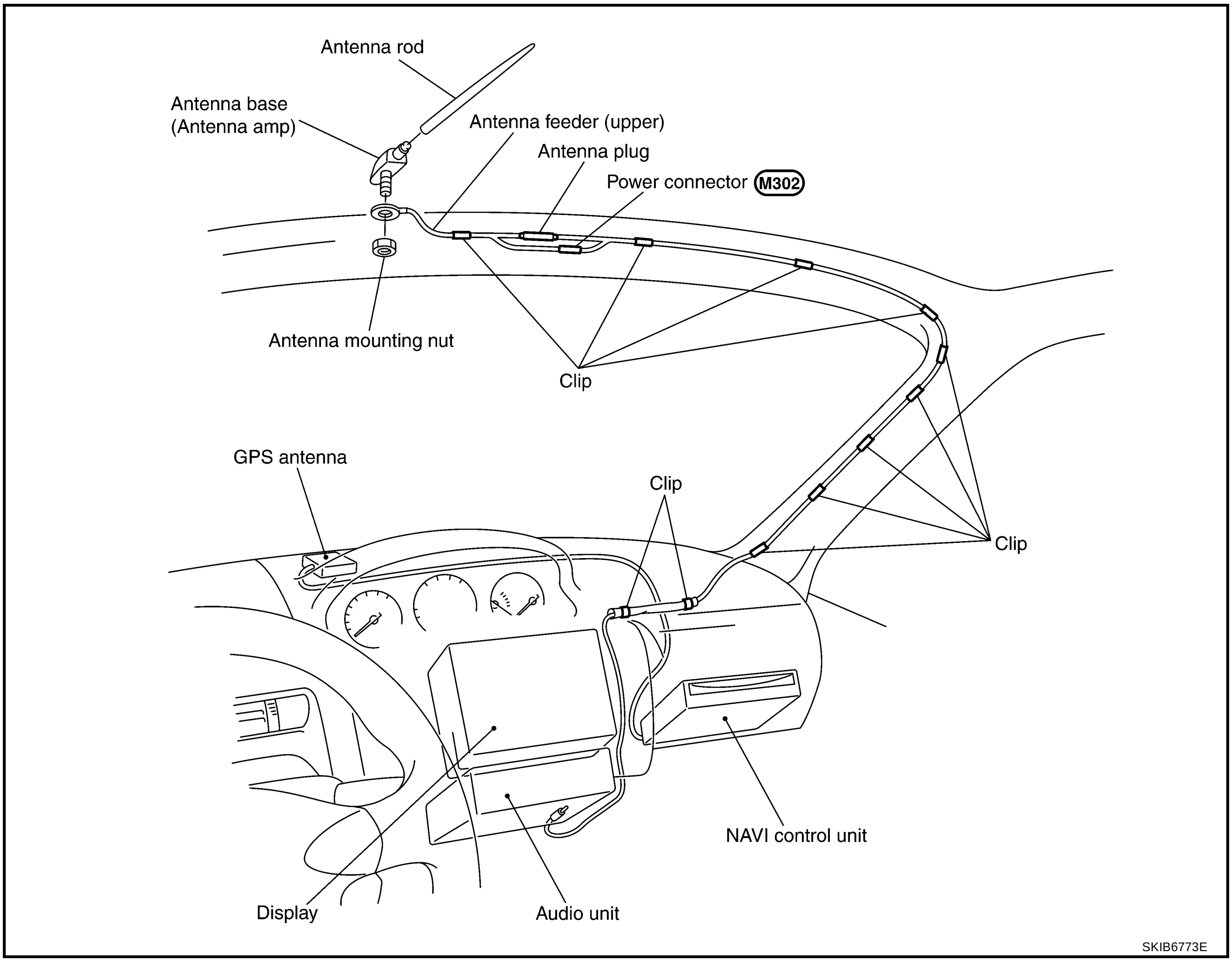

DISPLAY

- Images on the display include RGB image such as map screen.
- NAVI control unit controls images on the display.

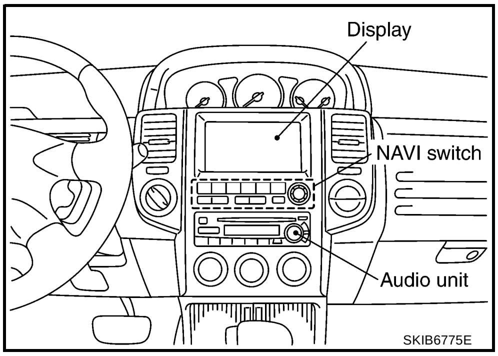

NAVI SWITCH

- NAVI switch connects to the display with communication lines.
- Communication form of the operation signal is conversed in display to NAVI switch. The operation signal is transmitted to NAVI control unit.

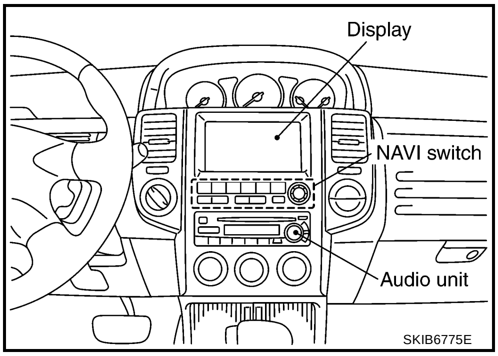

TRANSFER UNIT

- Transfer unit connects to the NAVI control unit with comunication lines.
- Transfer unit outputs ON signal and voice guidance signal to voice change relay.

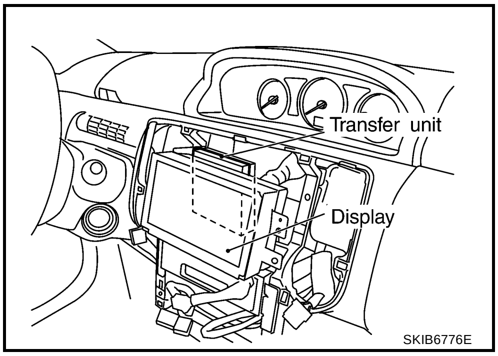

VOICE CHANGE RELAY

Voice change relay converses the audio signal transmitted from audio unit and the voice guidance signal transmitted from NAVI control unit through transfer unit. And voice change relay outputs the audio signal and the voice guidance signal to driver-side speaker.

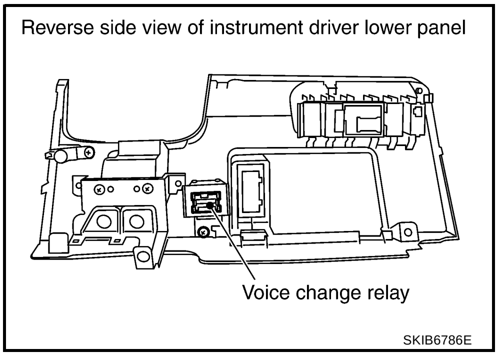

Precautions for NAVI Control Unit Replacement

AKS00F7P

- When replacing the NAVI control unit, eject the map DVD-ROM before disconnecting the battery.
- The NAVI control unit has the following information stored in its memory. Record the memory contents before replacing the control unit, and input them in the new unit as necessary.

<Image quality>

- **Brightness of light when ON/OFF**
- **Dimming switching**
- **Display color switching**

<Navigation mode>

- **Latest status (map screen/BIRDVIEW® , reduced scale, rotation angle of map screen, route guide ON/OFF, track ON/OFF, etc.)**
- **Current position**
- **Destination, passing point 1 – 5**
- **Registered places, their names, etc.**

NOTE:
Only removing the battery does not erase the memory.

Component Parts And Harness Connector Location

AKS00F7Q

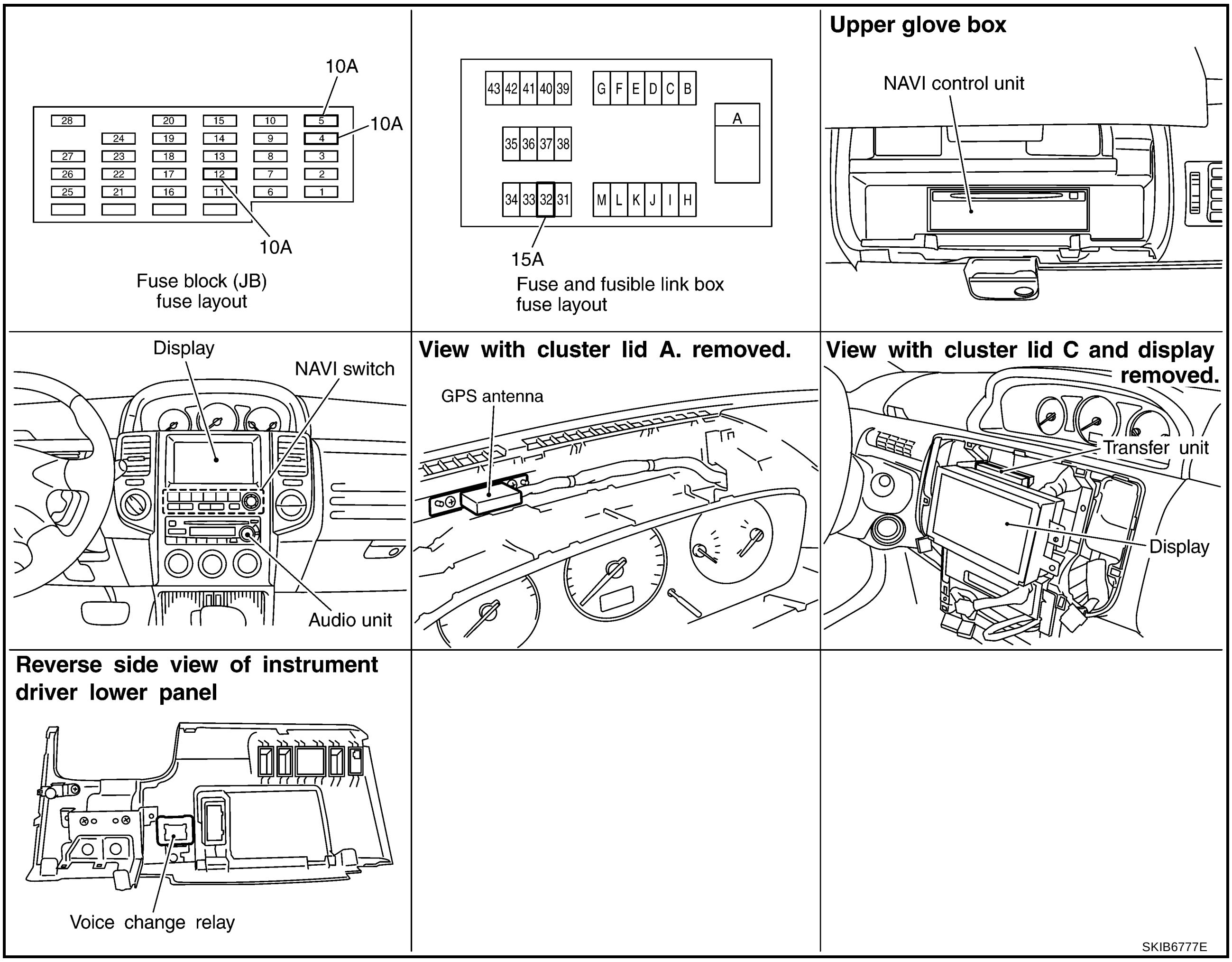

Schematic

AKS00F7R

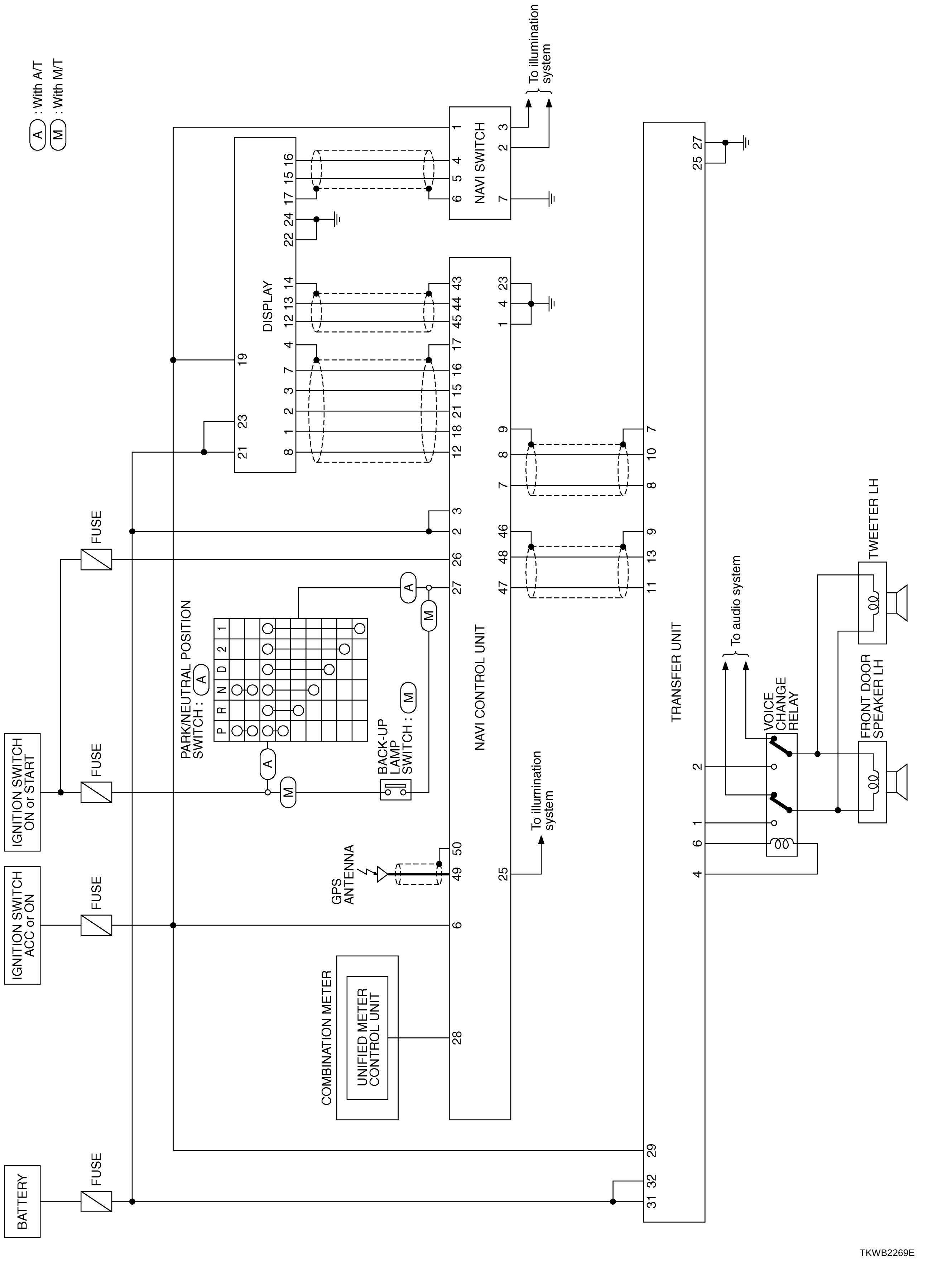

TKWB2269E

Wiring Diagram — NAVI —

AKS00F7S

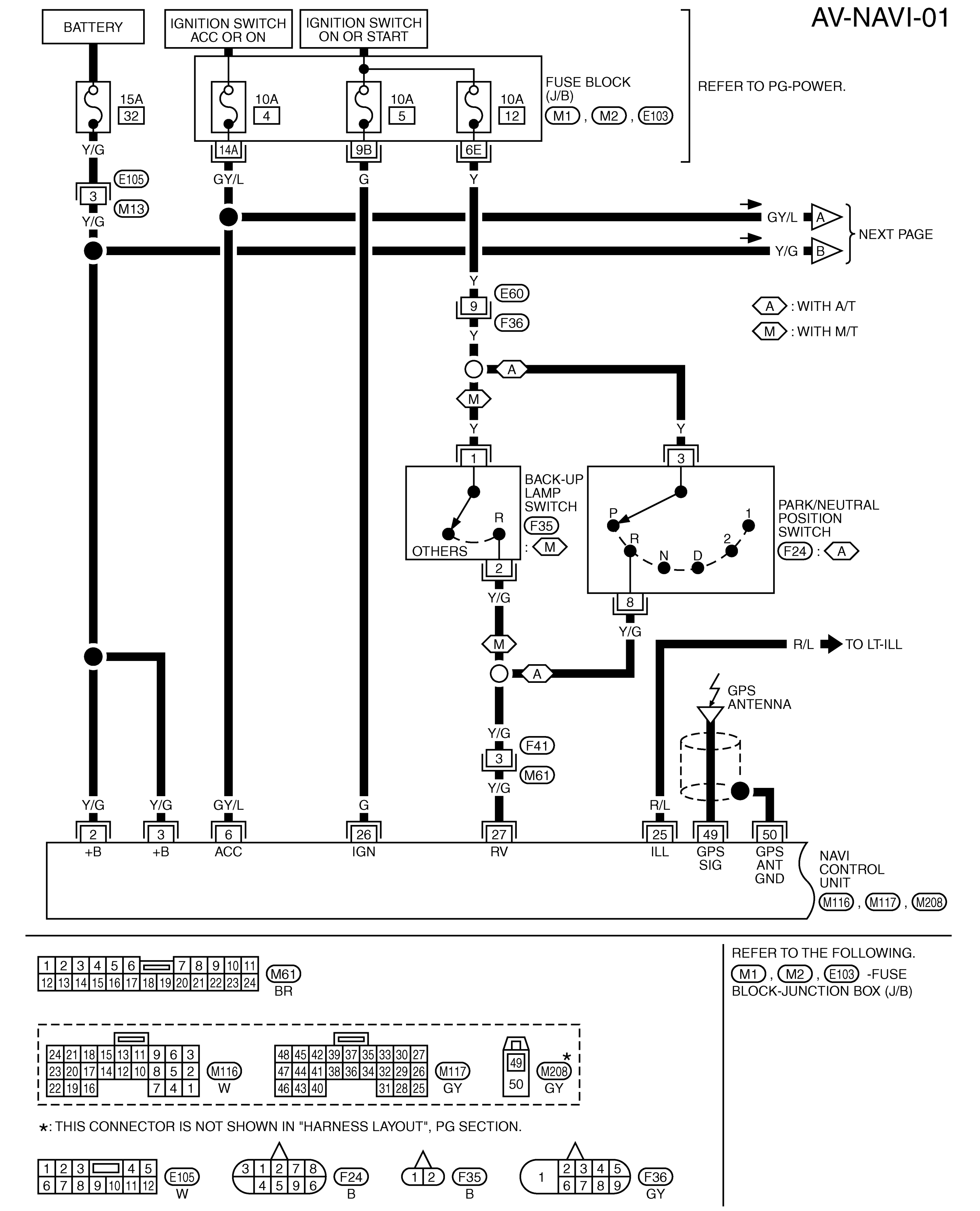

TKWB2270E

AV-NAVI-02

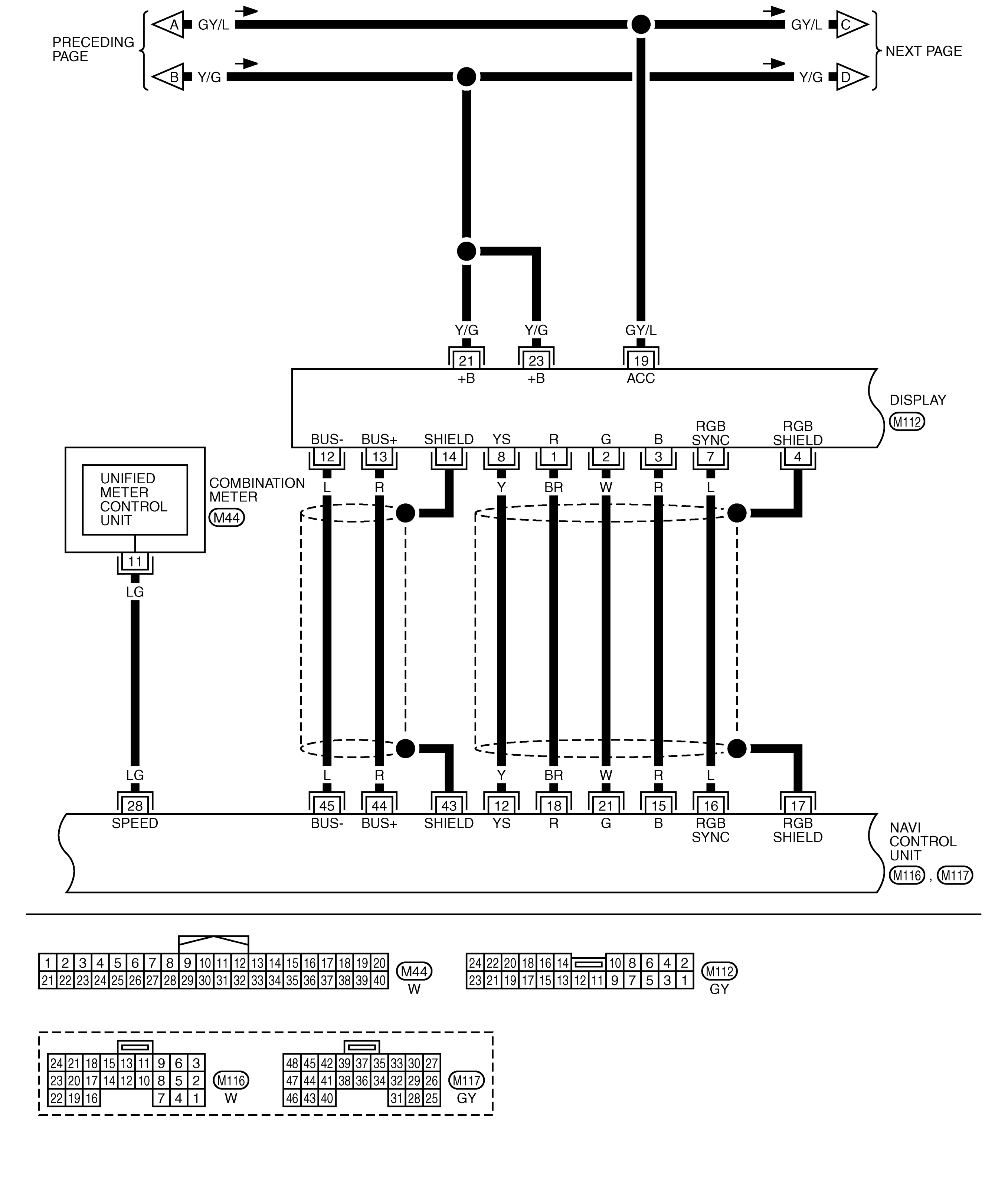

TKWB2271E

AV-NAVI-03

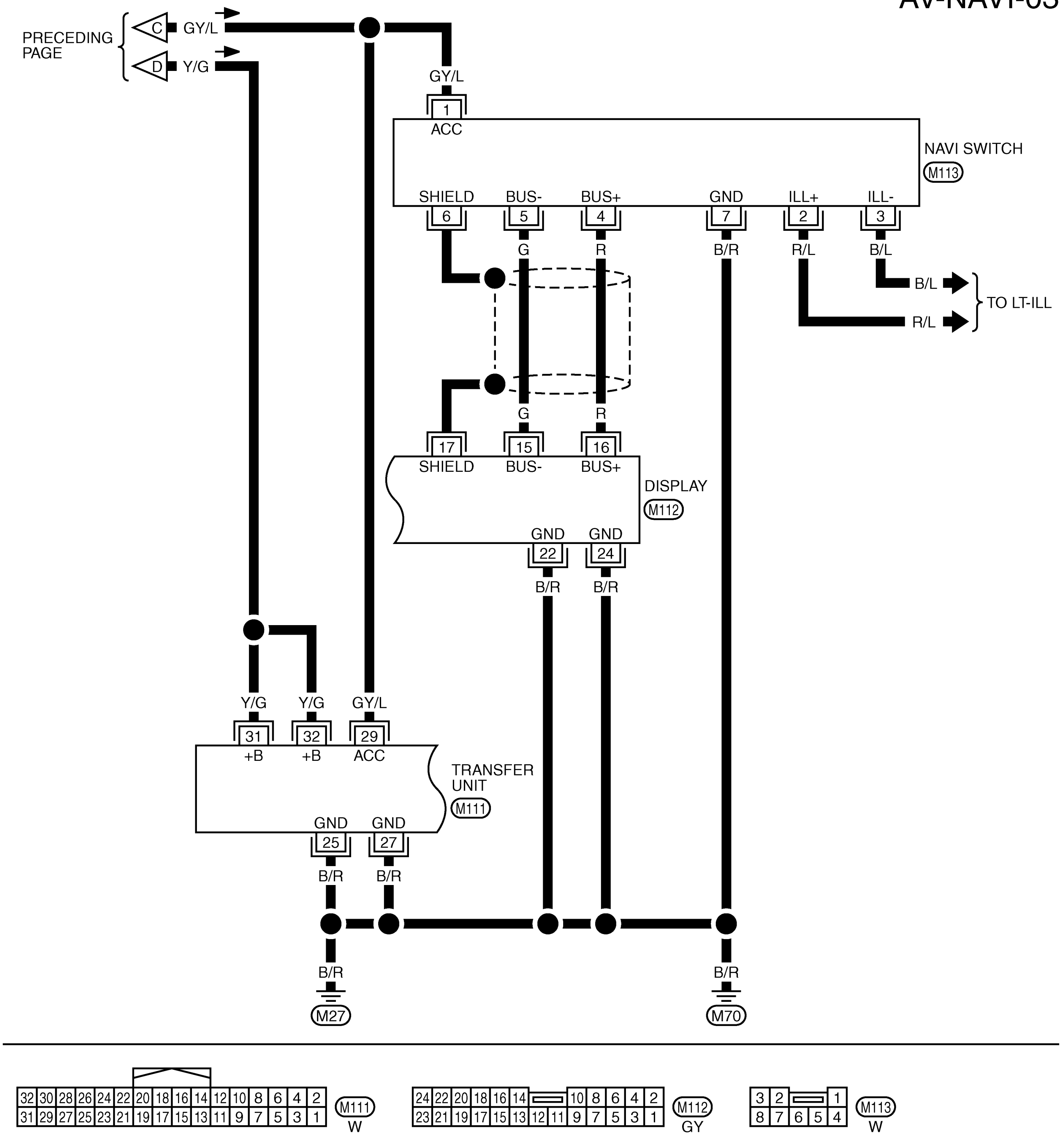

TKWB2272E

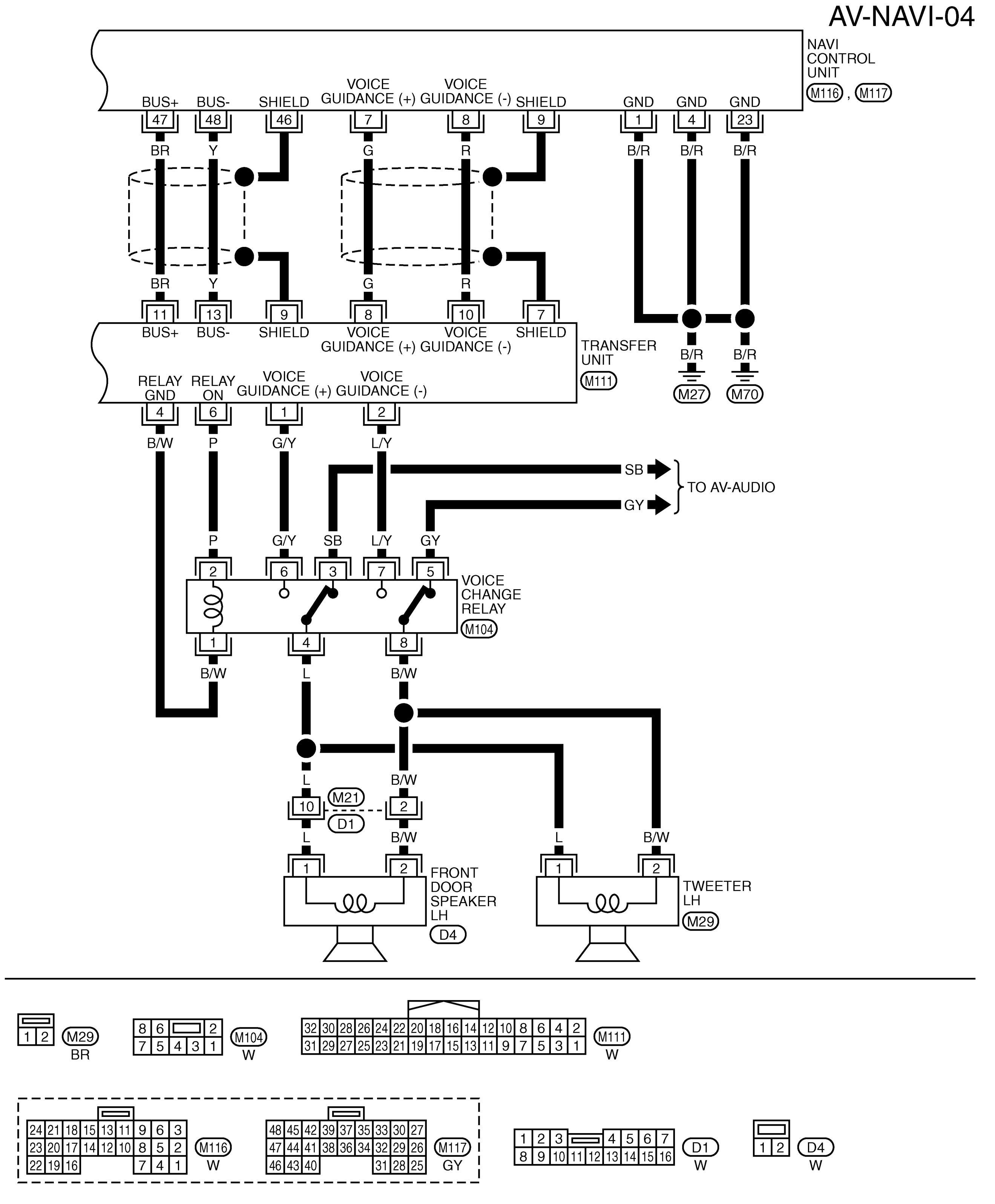
AV-NAVI-04
NAVI CONTROL UNIT
M116, M117
BUS+ BUS- SHIELD VOICE GUIDANCE (+) VOICE GUIDANCE (-) SHIELD GND GND GND
47 48 46 7 8 9 1 4 23
BR Y G R B/R B/R B/R
11 13 9 8 10 7
BUS+ BUS- SHIELD VOICE GUIDANCE (+) VOICE GUIDANCE (-) SHIELD
TRANSFER UNIT
M111
RELAY GND RELAY ON VOICE GUIDANCE (+) VOICE GUIDANCE (-)
4 6 1 2
B/W P G/Y L/Y
M27 M70
SB GY
TO AV-AUDIO
P G/Y SB L/Y GY
2 6 3 7 5
VOICE CHANGE RELAY
M104
1 4 8
B/W L B/W
M21
D1
10 2
FRONT DOOR SPEAKER LH
D4
TWEETER LH
M29
M29 BR
M104 W
M111 W
M116 W
M117 GY
D1 W
D4 W
TKWB2273E

Terminals and Reference Value for NAVI Control Unit

AKS00F7T

Terminal (Wire color)		Item	Signal input/ output	Condition		Reference value
(+)	(–)			Ignition switch	Operation	
1 (B/R)	Ground	Ground	—	ON	—	Approx. 0 V
2 (Y/G)	Ground	Battery power supply	Input	OFF	—	Battery voltage
3 (Y/G)	Ground	Battery power supply	Input	OFF	—	Battery voltage
4 (B/R)	Ground	Ground	—	ON	—	Approx. 0 V
6 (GY/L)	Ground	ACC power supply	Input	ACC	—	Battery voltage
7 (G)	8 (R)	Voice guidance signal	Output	ON	Press the “VOICE” switch.	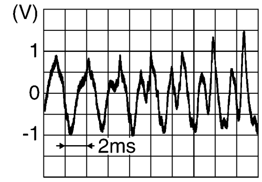 SKIB3609E
9	—	Shield	—	—	—	—
12 (Y)	Ground	RGB area signal	Output	ON	—	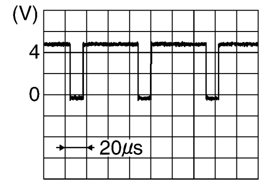 SKIB3600E
15 (R)	17	RGB signal (B: blue)	Output	ON	Select “Color bar” of CONFIRMATION/ ADJUSTMENT function.	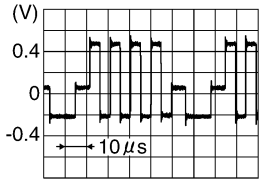 SKIB3602E
16 (L)	Ground	RGB synchronizing signal	Output	ON	—	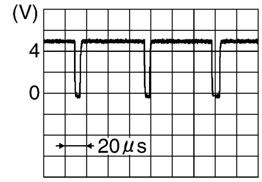 SKIB3603E
17	—	Shield	—	—	—	—
18 (BR)	17	RGB signal (R: red)	Output	ON	Select “Color bar” of CONFIRMATION/ ADJUSTMENT function.	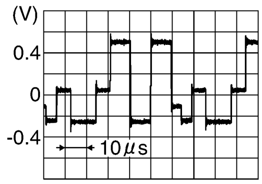 SKIB3604E

Terminal (Wire color)		Item	Signal input/ output	Condition		Reference value
(+)	(–)			Ignition switch	Operation	
21 (W)	17	RGB signal (G: green)	Output	ON	Select “Color bar” of CONFIRMATION/ ADJUSTMENT function.	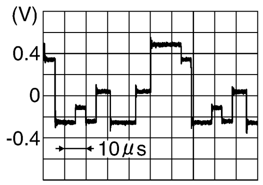 SKIB3605E
23 (B/R)	Ground	Ground	—	ON	—	Approx. 0 V
25 (R/L)	Ground	Illumination signal	Input	OFF	Lighting switch position 1st or 2nd	Approx.12 V
					Lighting switch position OFF	Approx. 0 V
26 (G)	Ground	IGN signal	Input	ON	—	Battery voltage
27 (Y/G)	Ground	Reverse signal	Input	ON	Select R-position	Approx.12 V
					Other position	Approx. 0 V
28 (LG)	Ground	Vehicle speed signal (8-pulse)	Input	ON	When vehicle speed is approx. 40 km/h (25 MPH)	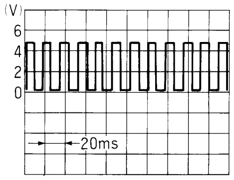 ELF1084D
43	—	Shield	—	—	—	—
44 (R)	Ground	Communication signal (+)	Input/ output	ON	—	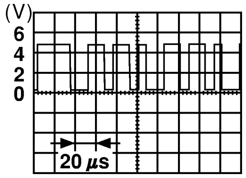 SKIA0175E
45 (L)	Ground	Communication signal (–)	Input/ output	ON	—	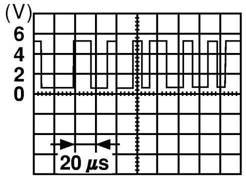 SKIA0176E
46	—	Shield	—	—	—	—
47 (BR)	Ground	Communication signal (+)	Input/ output	ON	—	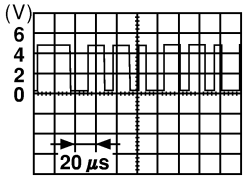 SKIA0175E

Terminal (Wire color) (+)	Terminal (Wire color) (–)	Item	Signal input/ output	Condition: Ignition switch	Condition: Operation	Reference value
48 (Y)	Ground	Communication signal (–)	Input/ output	ON	—	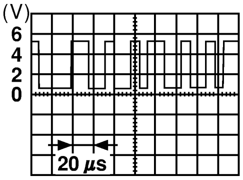 SKIA0176E
49	Ground	GPS antenna signal	Input	ON	Connector is not connected.	Approx. 5 V
50	—	Shield	—	—	—	—

Terminals and Reference Value for Display

AKS00F7U

Terminal (Wire color) (+)	Terminal (Wire color) (–)	Item	Signal input/ output	Condition: Ignition switch	Condition: Operation	Reference value
1 (BR)	4	RGB signal (R: red)	Input	ON	Select "Color bar" of CONFIRMATION/ ADJUSTMENT function.	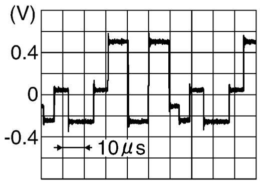 SKIB3604E
2 (W)	4	RGB signal (G: green)	Input	ON	Select "Color bar" of CONFIRMATION/ ADJUSTMENT function.	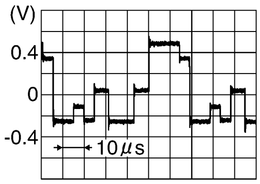 SKIB3605E
3 (R)	4	RGB signal (B: blue)	Input	ON	Select "Color bar" of CONFIRMATION/ ADJUSTMENT function.	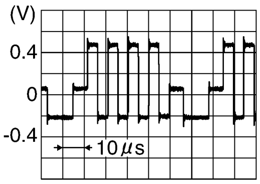 SKIB3602E
4	—	RGB shield	—	—	—	—
7 (L)	4	RGB synchronizing signal	Input	ON	—	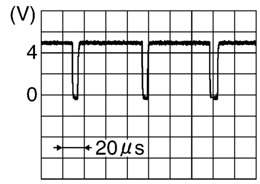 SKIB3603E

Terminal (Wire color)		Item	Signal input/ output	Condition		Reference value
(+)	(–)			Ignition switch	Operation	
8 (Y)	Ground	RGB area signal	Input	ON	—	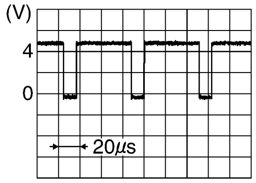 SKIB3600E
12 (L)	Ground	Communication signal (–)	Input/ output	ON	—	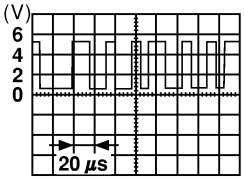 SKIA0176E
13 (R)	Ground	Communication signal (+)	Input/ output	ON	—	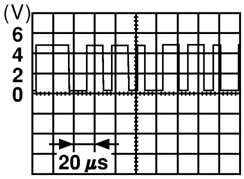 SKIA0175E
14	—	Shield	—	—	—	—
15 (G)	Ground	Communication signal (–)	Input/ output	ON	—	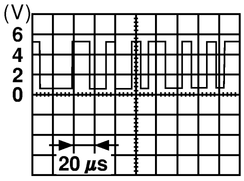 SKIA0176E
16 (R)	Ground	Communication signal (+)	Input/ output	ON	—	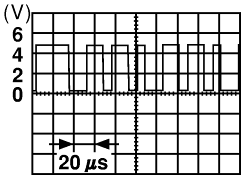 SKIA0175E
17	—	Shield	—	—	—	—
19 (GY/L)	Ground	ACC power supply	Input	ACC	—	Battery voltage
21 (Y/G)	Ground	Battery power supply	Input	OFF	—	Battery voltage
22 (B/R)	Ground	Ground	—	ON	—	Approx. 0 V
23 (Y/G)	Ground	Battery power supply	Input	OFF	—	Battery voltage
24 (B/R)	Ground	Ground	—	ON	—	Approx. 0 V

Terminals and Reference Value for NAVI Switch

AKS00F7V

Terminal (Wire color)		Item	Signal input/ output	Condition		Reference value
(+)	(–)			Ignition switch	Operation	
1 (GY/L)	Ground	ACC power supply	Input	ACC	—	Battery voltage
2 (R/L)	3 (B/L)	Illumination signal	Input	OFF	Lighting switch position 1st or 2nd	Approx. 12 V
					Lighting switch position OFF	Approx. 0 V
4 (R)	Ground	Communication signal (+)	Input/ output	ON	—	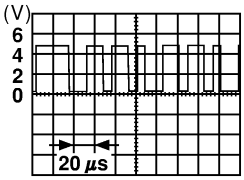 SKIA0175E
5 (G)	Ground	Communication signal (–)	Input/ output	ON	—	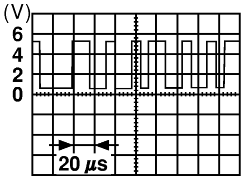 SKIA0176E
6	—	Shield	—	—	—	—
7 (B/R)	Ground	Ground	—	ON	—	Approx. 0 V

Terminals and Reference Value for Transfer Unit

AKS00F7W

Terminal (Wire color)		Item	Signal input/ output	Condition		Reference value
(+)	(–)			Ignition switch	Operation	
1 (G/Y)	2 (L/Y)	Voice guidance signal	Output	ON	Press the “VOICE” switch.	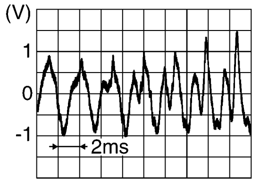 SKIB3609E
6 (P)	4 (B/W)	Voice change relay ON signal	Output	ON	Press the “VOICE” switch.	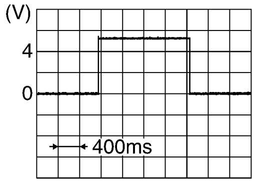 SKIB3610E
7	—	Shield	—	—	—	—

Terminal (Wire color)		Item	Signal input/ output	Condition		Reference value
(+)	(–)			Ignition switch	Operation	
8 (G)	10 (R)	Voice guidance signal	Input	ON	Press the “VOICE” switch.	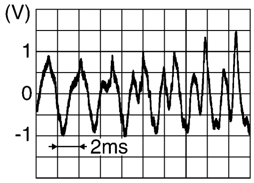 SKIB3609E
9	—	Shield	—	—	—	—
11 (BR)	Ground	Communication signal (+)	Input/ output	ON	—	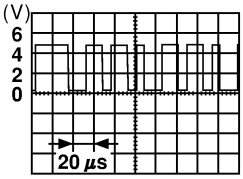 SKIA0175E
13 (Y)	Ground	Communication signa (–)	Input/ output	ON	—	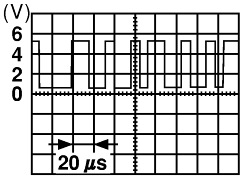 SKIA0176E
25 (B/R)	Ground	Ground	—	ON	—	Approx. 0 V
27 (B/R)	Ground	Ground	—	ON	—	Approx. 0 V
29 (GY/L)	Ground	ACC power supply	Input	ACC	—	Battery voltage
31 (Y/G)	Ground	Battery power supply	Input	OFF	—	Battery voltage
32 (Y/G)	Ground	Battery power supply	Input	OFF	—	Battery voltage

Terminals and Reference Value for Voice Change Relay

AKS00F7Y

Terminal (Wire color)		Item	Signal input/ output	Condition		Reference value
(+)	(–)			Ignition switch	Operation	
2 (P)	1 (B/W)	Voice change relay ON signal	Input	ON	Press the “VOICE” switch.	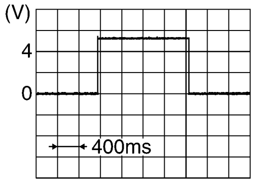 SKIB3610E
3 (SB)	5 (GY)	Audio signal front LH (driver side)	Input	ON	Receive audio signal.	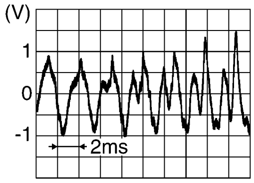 SKIB3609E

Terminal (Wire color)		Item	Signal input/ output	Condition		Reference value
(+)	(–)			Ignition switch	Operation	
4 (L)	8 (B/W)	Voice guidance signal	Output	ON	Press the “VOICE” switch.	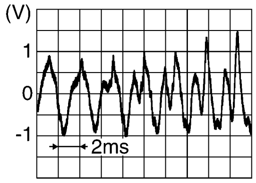 SKIB3609E
6 (G/Y)	7 (L/Y)	Voice guidance signal	Input	ON	Press the “VOICE” switch.	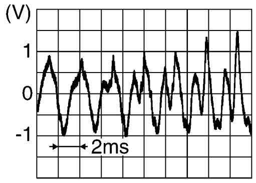 SKIB3609E

Self-Diagnosis Function

AKS00F7Z

DESCRIPTION

- Diagnosis function consists of the self-diagnosis mode performed automatically and the CONFIRMATION/ADJUSTMENT mode operated manually.
- Self-diagnosis mode checks for connections between the units constituting this system, analyzes each individual unit at the same time, and displays the results on the display.
- CONFIRMATION/ADJUSTMENT mode is used to perform trouble diagnosis that require operation and judgment by an operator (trouble that cannot be automatically judged by the system), to check/change the set value, and to display the History of Errors of the navigation system.

DIAGNOSIS ITEM

Mode			Description
Self-Diagnosis			● NAVI Control unit diagnosis (DVD-ROM drive will not be diagnosed when no map DVD-ROM is in it.). ● Performs diagnosis of each unit and connections between control unit and GPS antenna, as well as between control unit and each unit.
Confirmation / Adjustment	Display Diagnosis		Color tone and shading of the screen can be checked by the display of a color bar and a gray scale.
	Vehicle Signals		Analyzes the following vehicle signals: Vehicle speed signal, light signal, ignition switch signal, and reverse signal.
	History of Errors		Diagnosis results previously stored in the memory (before turning ignition switch ON) are displayed in this mode. Time and location when/where the errors occurred are also displayed.
	Navigation	Display Longitude & Latitude	Display the map. Use the joystick to adjust position. Longitude and latitude will be displayed.
		Speed Calibration	Under ordinary conditions, the navigation system distance measuring function will automatically compensate for minute decreases in wheel and tire diameter caused by tire wear or low pressure. Speed calibration immediately restores system accuracy in cases such as when distance calibration is needed because of the use of tire chains in inclement weather.
		Angle Adjustment	Corrects difference between actual turning angle of a vehicle and turning angle of the car mark on the display.
		Initialize Location	This mode is for initializing the current location. Use when the vehicle is transported a long distance on a trailer, etc.

Self-Diagnosis Mode

AKS00F80

OPERATION PROCEDURE

1. Start the engine.
2. Press and hold “MAP” and “☀/☽” switches simultaneously for 5 seconds or more.
   - Press the “PREVIOUS” switch and the initial system screen will be shown.

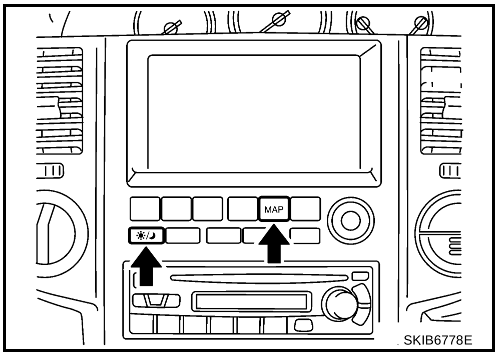

SKIB6778E

3. The initial trouble diagnosis screen will be shown, and items “Self-Diagnosis” and “Confirmation/Adjustment” will become selective.

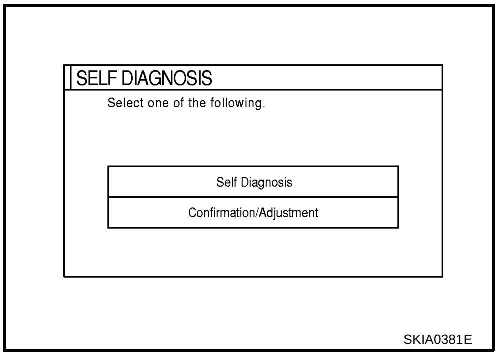

SKIA0381E

4. Perform self-diagnosis by selecting the “Self-Diagnosis”.
   - Self-diagnosis subdivision screen will be shown and the operation enters the self-diagnosis mode.
   - A bar graph shown below the self-diagnosis subdivision screen indicates progress of the diagnosis.

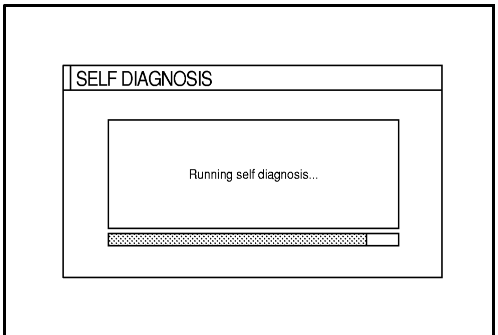

SKIA0382E

5. On the “SELF-DIAGNOSIS” screen, each unit name will be colored according to the diagnosis result, as follows.

   Green : No malfunctioning.
   Yellow : Cannot be judged by self-diagnosis results.
   Red : Unit is malfunctioning.
   Gray : Diagnosis has not been done.

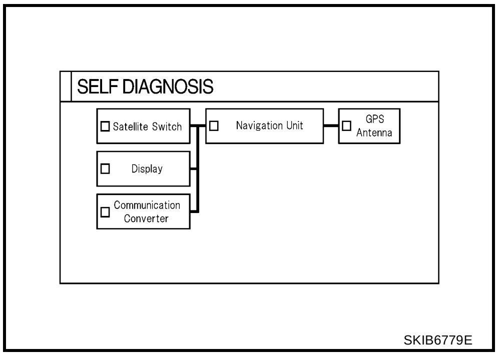

SKIB6779E

NOTE:

- Navigation Unit = NAVI control unit
- Communication Converter = Transfer unit
- Satellite Switch = NAVI switch
- If multiple malfunctions occur at the same time for a single unit, the screen switch colors are determined according to the following order of priority: red > yellow > gray.
- Display when it is normal
  - Between Navigation Unit and GPS antenna : green.
    Between Navigation Unit and Satellite Switch, Navigation Unit and Display, Navigation Unit and Communication Converter : gray.

6. Select a switch on the "SELF-DIAGNOSIS" screen and comments for the diagnosis results will be shown.

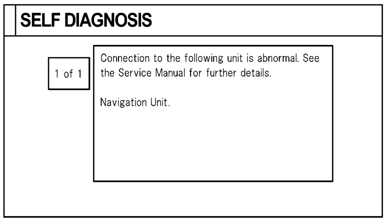

SKIB6780E

SELF–DIAGNOSIS RESULT

Quick reference table

1. Select an applicable diagnosis No. in the diagnosis result quick reference table.
2. Find estimated malfunctioning system in the diagnosis No. table and perform check.
3. Turn the ignition switch to OFF and perform self-diagnosis again.

Diagnosis result quick reference table

Screen switch				Diagnosis No.
Switch color	Navigation Unit	GPS Antenna	Communication Converter	
Red	×			1
Gray	×			2
Yellow	×			3
	×			4
	×	×		5
	×		×	6

Self–diagnosis codes

Diagnosis No.	Possible cause	Reference page
1	NAVI control unit malfunction	—
2	NAVI control unit judged no map DVD-ROM is inserted.	—
3	When "DVD-ROM error. Please check disc." is shown 1. Eject map DVD-ROM and check if it is compatible with the system. 2. Check ejected DVD-ROM for dirt, damage, and warpage. 3. If no error is found, insert a known good map DVD-ROM of the same type and perform self-diagnosis again. If same result is shown, the NAVI control unit is malfunctioning. If result is normal, the map DVD-ROM is malfunctioning.	—
4	If "Error found in DVD-ROM or DVD-ROM driver in control unit. Please perform diagnosis in accordance with service manual" is shown, carry out same inspection as diagnosis No. 3.	—
5	GPS antenna system 1. Visually check for a broken wire in the GPS antenna coaxial cable. 2. Disconnect the GPS antenna connector and check that approximately 5V is supplied from NAVI control unit. If not, the NAVI control unit is inoperative. If the voltage is supplied, replace the GPS antenna and perform self-diagnosis again. If the same result is shown, the NAVI control unit is inoperative.	—
6	Transfer unit power supply and ground circuit. Communication line between NAVI C/U and transfer unit.	AV-43

CONFIRMATION/ADJUSTMENT Mode

AKS00F81

OPERATION PROCEDURE

1. Start the engine.
2. Press and hold “MAP” and “☀/☽” switches simultaneously for 5 seconds or more.
   - Press the “PREVIOUS” switch and the initial system screen will be shown.

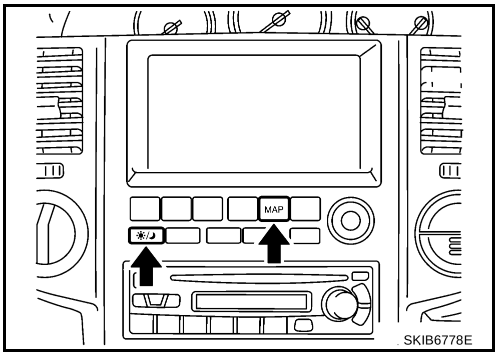

SKIB6778E

3. The initial trouble diagnosis screen will be shown, and items “Self-Diagnosis” and “Confirmation/Adjustment” will become selective.

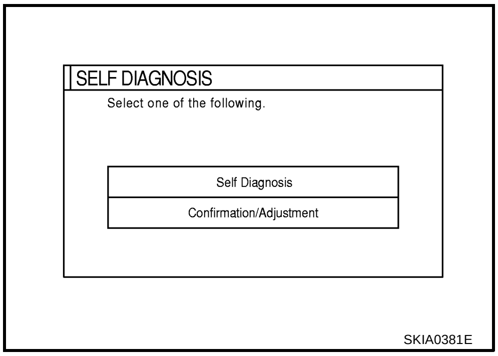

SKIA0381E

4. When “Confirmation/Adjustment” is selected on the initial trouble diagnosis screen, the operation will enter the CONFIRMATION/ ADJUSTMENT mode. In this mode, check and adjustment of each item will become possible.
5. Select each switch on “Confirmation/Adjustment” screen to display the relevant diagnosis screen.

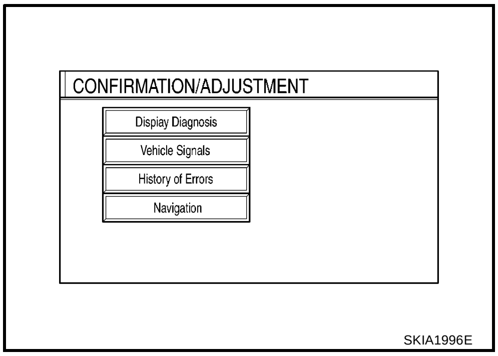

SKIA1996E

DISPLAY

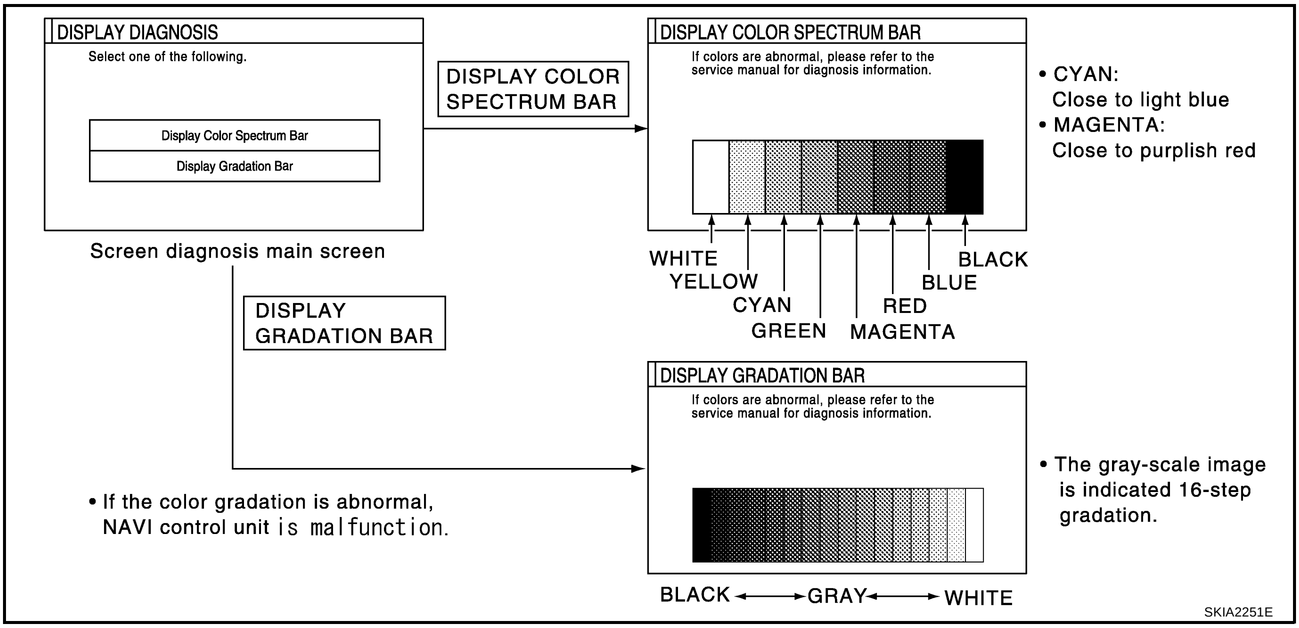

CAUTION:

When Display Color Spectrum Bar screen is completed after “PREVIOUS” switch is Pressed, the screen color changes once. This is normal.

- When RGB signal error occurred in the RGB system, tone of the color bar will change as follows.

R (red) signal error	**: Screen looks bluish.**
G (green) signal error	**: Screen looks reddish.**
B (blue) signal error	**: Screen looks yellowish.**

- When the color of the screen looks unusual, refer to AV-48, "Color of RGB Image Is Not Proper" .

VEHICLE SIGNALS

- A comparison check can be made of each actual vehicle signal and the signals recognized by the system.

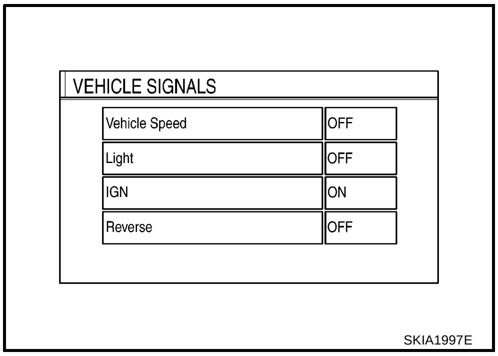

SKIA1997E

Diagnosis item	Display	Condition	Remarks
Vehicle speed	ON	Vehicle speed > 0 km/h (0 MPH)	Changes in indication may be delayed by approx. 1.5 seconds. This is normal.
	OFF	Vehicle speed = 0 km/h (0 MPH)	
	—	Ignition switch in ACC position	
Light	ON	Lighting switch ON	—
	OFF	Lighting switch OFF	
IGN	ON	Ignition switch ON	—
	OFF	Ignition switch ACC	
Reverse	ON	Selector lever in R-position	Changes in indication may be delayed by approx. 1.5 seconds. This is normal.
	OFF	Selector lever in other than R-position	
	—	Ignition switch in ACC position	

- If vehicle speed is NG, refer to AV-44, "Vehicle Speed Signal Check" .
- If light is NG, refer to AV-45, "Illumination Signal Check" .
- If IGN is NG, refer to AV-45, "Ignition Signal Check" .
- If reverse is NG, refer to AV-46, "Reverse Signal Check" .

HISTORY OF ERRORS

Diagnosis results of self-diagnosis depend on if any error occurred during the time after selecting “Self-Diagnosis” until self-diagnosis results is displayed.
Meanwhile, when an error occurs before selecting “Self-Diagnosis”, and if an error does not occur until self-diagnosis results is displayed, a diagnosis result is judged as normal.
Consequently, a diagnosis needs to be performed with “History of Error” for the past error that is not available with self-diagnosis.
“History of Error” displays the time and place of the most recent occurrence of that error. However, take note of the following points.

- Correct time of the error occurrence may not be displayed when the GPS antenna substrate within the NAVI control unit has malfunctioned.
- Place of the error occurrence is represented by the position of the vehicle mark at the time when the error occurred. If the vehicle mark has deviated from the correct position, then the place of the error occurrence may be located correctly.

- “History of Error” stores error occurrences up to 50, and errors after the 51st are displayed as the 50th.

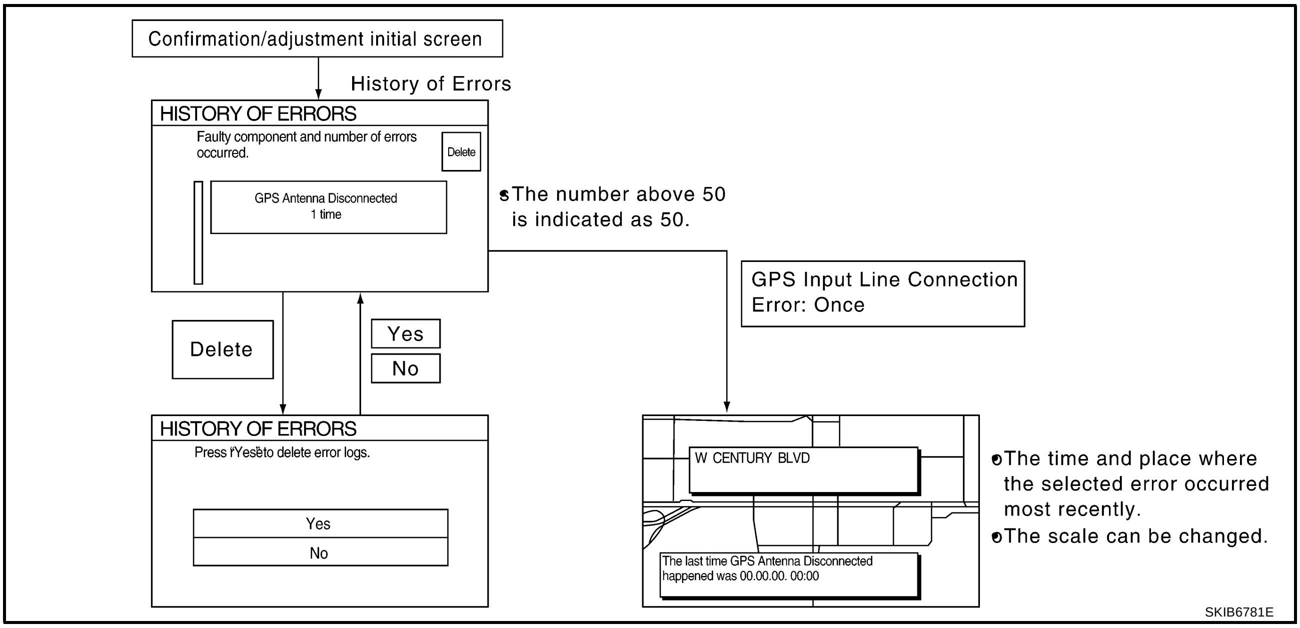

SKIB6781E

Diagnosis by History of Errors

When having a difficulty on the investigation of cause due to multiple errors with a reproducible malfunction, turn ON the ignition switch from OFF mode after making a memo of the item and number of time (or delete “History of Error”). Check “History of Error” again after the malfunction was reproduced, and then perform diagnosis focusing on the item of which number of time increased.

Error item	Possible causes / Action/symptom	Example of symptom
Gyro sensor disconnected	Communications malfunction between NAVI control unit and internal gyro. ● Perform self-diagnosis. ● When the NAVI control unit is judged normal by self-diagnosis, the symptom may be intermittent, caused by strong radio interference.	● Navigation location detection performance has deteriorated. (Angular velocity cannot be detected.)
GPS disconnected	Communication error between NAVI control unit and internal GPS substrate. ● Perform self-diagnosis. ● When the NAVI control unit is judged normal by self-diagnosis, the symptom may be intermittent, caused by strong radio interference.	● Navigation location detection performance has deteriorated. (Location correction using GPS is not performed.) ● GPS receiving status remains gray.
GPS transmission cable malfunction	Malfunctioning transmission wires to NAVI control unit and internal GPS substrate. ● Perform self-diagnosis. ● When the NAVI control unit is judged normal by self-diagnosis, the symptom may be intermittent, caused by strong radio interference.	● During self-diagnosis, GPS diagnosis is not performed.
GPS input line connection error	Malfunctioning receiving wires to NAVI control unit and internal GPS substrate. ● Perform self-diagnosis. ● When the NAVI control unit is judged normal by self-diagnosis, the symptom may be intermittent, caused by strong radio interference.	● Navigation location detection performance has deteriorated. (Location correction using GPS is not performed.) ● GPS receiving status remains gray.

Error item	Possible causes / Action/symptom	Example of symptom
GPS TCX0 over GPS TCX0 under	Oscillating frequency of the GPS substrate frequency synchronizing oscillation circuit exceeded (or below) the specification.	● Navigation location detection performance has deteriorated. (Location correction using GPS is not performed.) ● GPS receiving status remains gray.
	● Perform self-diagnosis. ● When the NAVI control unit is judged normal by self-diagnosis, the symptom may be intermittent, caused by strong radio interference, or the control unit may have been subjected to excessively high or low temperatures.	
GPS ROM malfunction GPS RAM malfunction	Contents of ROM (or RAM) in GPS substrate are malfunctioning.	● Location detection accuracy of the navigation system will deteriorate, depending on the error area in the memory, because GPS cannot make correct positioning. (Location correction using GPS is not performed.)
	● Perform self-diagnosis. ● When the NAVI control unit is judged normal by self-diagnosis, the symptom may be intermittent, caused by strong radio interference.	
GPS RTC malfunction	Clock IC in GPS substrate is malfunctioning.	● Correct time may not be displayed. ● After the power is turned on, the system always takes some time until GPS positioning becomes possible. (The GPS receiver starts positioning without re-collecting the whole satellite information when it judged the data stored in the receiver is correct.) ● Correct time of error occurrence may not be stored in the ″History of Errors″.
	● Perform self-diagnosis. ● When the NAVI control unit is judged normal by self-diagnosis, the symptom may be intermittent, caused by strong radio interference.	
GPS antenna disconnected	Malfunctioning connection between GPS substrate in NAVI control unit and GPS antenna.	● Navigation location detection performance has deteriorated. (Location correction using GPS is not performed.) ● GPS receiving status remains gray.
	● Perform self-diagnosis. ● When connection between NAVI control unit and GPS antenna is judged normal by self-diagnosis, the symptom may be intermittent, caused by impact or vibration.	
Low voltage of GPS	The power voltage supplied to the GPS circuit board has decreased.	● Navigation location detection performance has deteriorated. (Location correction using GPS is not performed.) ● GPS receiving status remains gray.
	● Perform self-diagnosis. ● When connection between NAVI control unit and GPS antenna is judged normal by self-diagnosis, the symptom may be intermittent, caused by impact or vibration.	
DVD-ROM malfunction DVD-ROM read error DVD-ROM response Error	Malfunctioning NAVI control unit.	—
	Dedicated map DVD-ROM is in the system, but the data cannot be read.	● The map of a particular location cannot be displayed. ● Specific guidance information cannot be displayed. ● Map display is slow. ● Guidance information display is slow. ● System has been affected by vibration.
	● Is map DVD-ROM damaged, warped, or dirty? – If damaged or warped, the map DVD-ROM is malfunctioning. – If dirty, wipe the DVD-ROM clean with a soft cloth. ● Perform self-diagnosis. ● When NAVI control unit is judged normal by self-diagnosis, the symptom is judged intermittent, caused by vibration.	

NAVIGATION

Display Longitude & Latitude

- Adjust the pointer with using the joystick and touch “Set”.

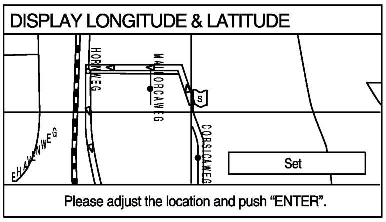

SKIA1616E

- The longitude and latitude are displayed.

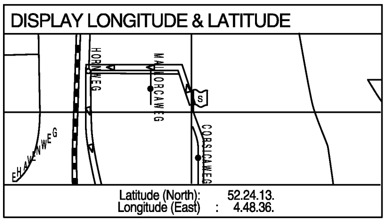

SKIA1617E

Speed Calibration

- During normal driving, distance error caused by tire wear and tire pressure change is automatically adjusted for by the automatic distance correction function. This function, on the other hand, is for immediate adjustment, in cases such as driving with tire chain fitted on tires.

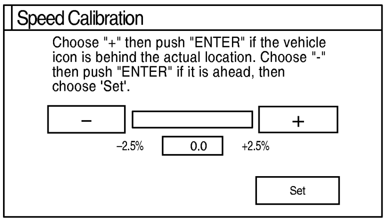

SKIB6782E

Angle Adjustment

- Adjusts turning angle output detected by the gyroscope.

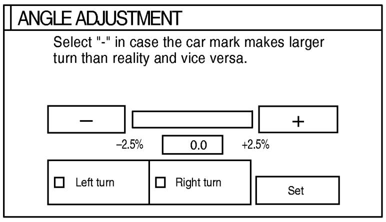

SKIB6783E

Communication Line Check (Between NAVI Control Unit and Transfer Unit) AKS00F8A

1. CHECK TRANSFER UNIT POWER SUPPLY AND GROUND CIRCUIT

Check system of power supply and ground circuit transfer unit.

OK or NG

OK >> GO TO 2.
NG >> Repair harness or connector of power supply and/or ground circuit.

2. CHECK HARNESS

1. Turn ignition switch OFF.
2. Disconnect NAVI control unit and transfer unit connectors.
3. Check continuity between and NAVI control unit harness connector (A) M117 terminals 47, 48 and transfer unit harness connector (B) M111 terminals 11, 13.

47 – 11 : Continuity should exist.
48 – 13 : Continuity should exist.

4. Check continuity between NAVI control unit harness connector (A) M117 terminals 47, 48 and ground.

47, 48 – Ground : Continuity should not exist.

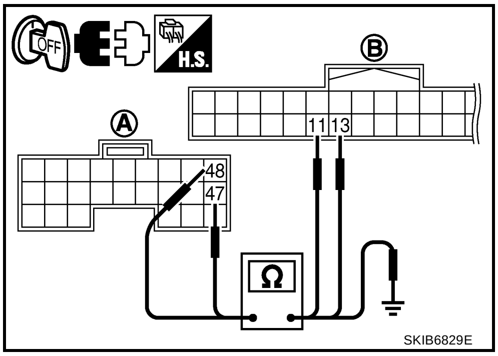

SKIB6829E

OK or NG

OK >> Inspection end.
NG >> Repair harness or connector.

Vehicle Speed Signal Check

AKS00F8C

1. CHECK VEHICLE SPEED OPERATION

Does speedometer operate normally?

YES or NO

YES >> GO TO 2.
NO >> Check combination meter trouble diagnosis. Refer to DI-16, "Vehicle Speed Signal Inspection (With VDC)" .

2. CHECK HARNESS

1. Turn the ignition switch OFF.
2. Disconnect NAVI control unit and combination meter connectors.
3. Check continuity between NAVI control unit harness connector M117 terminal 28 and Unified meter control unit harness connector M44 terminal 11.

   28 – 11 : Continuity should exist.

4. Check continuity between NAVI control unit harness connector M117 terminal 28 and ground.

   28 – Ground : Continuity should not exist.

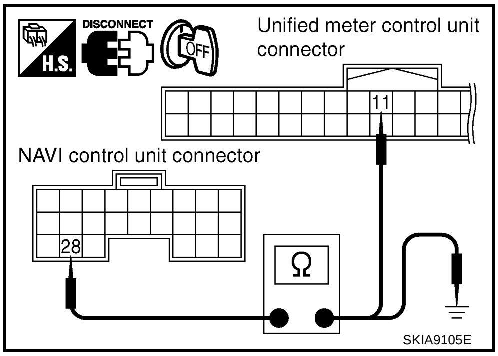

SKIA9105E

OK or NG

OK >> GO TO 3.
NG >> Repair harness or connector.

3. CHECK VEHICLE SPEED SIGNAL

1. Connect NAVI control unit and combination meter connectors.
2. Drive vehicle at more than 40 km/h (25 MPH).
3. Check the signal between NAVI control unit harness connector M117 terminal 28 and ground with CONSULT-II or oscilloscope.

28 – Ground :

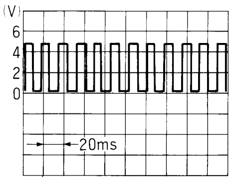

ELF1084D

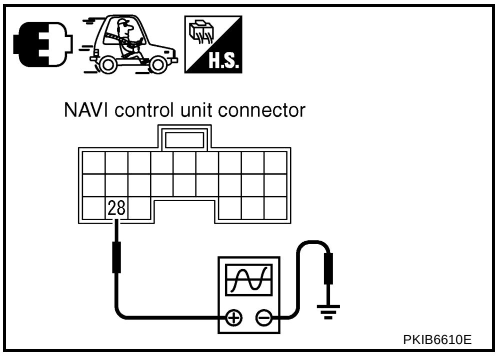

PKIB6610E

OK or NG

OK >> Inspection end.
NG >> Check combination meter system. Refer to DI-14, "Self-Diagnosis Mode of Combination Meter" .

Illumination Signal Check

AKS00F8D

1. CHECK TAIL LAMP OPERATION

When lighting switch turned 1st or 2nd position, does tail lamp illuminate?

YES or NO

YES >> GO TO 2.
NO >> Check tail lamp system. Refer to LT-37, "PARKING, LICENSE PLATE AND TAIL LAMPS" .

2. ILLUMINATION SIGNAL CHECK

Check voltage between NAVI control unit harness connector M117 terminal 25 and ground.

25 – Ground

Lighting switch is 1st or 2nd position : Approx. 12 V

Lighting switch is OFF : Approx. 0 V

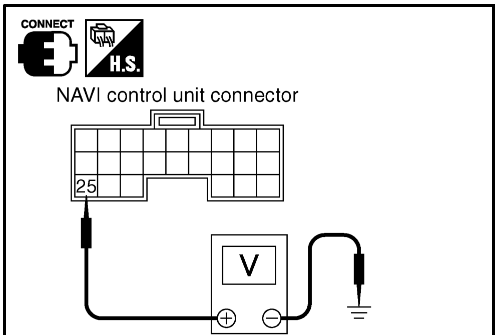

SKIB0315E

OK or NG

OK >> Inspection end.
NG >> Repair harness or connector.

Ignition Signal Check

AKS00F8E

1. CHECK IGNITION SIGNAL

1. Turn ignition switch ON.
2. Check voltage between NAVI control unit harness connector M117 terminal 26 and ground.

26 - Ground : Battery voltage

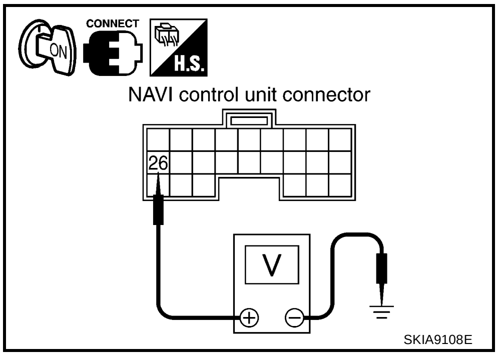

SKIA9108E

OK or NG

OK >> Inspection end.
NG >> Repair harness or connector.

Reverse Signal Check

AKS00F8F

1. CHECK REVERSE LAMP

Turn ignition switch ON.

- With the A/T selector lever in R-position, does “R” in the shift position indicator turned on? (With A/T)
- With the shift lever in R-position, are reverse lamps turned on? (With M/T)

YES or NO

YES >> GO TO 2.
NO >> Check “BACK-UP LAMP” system. Refer to LT-35, "BACK-UP LAMP" .

2. CHECK REVERSE SIGNAL

- Shift the A/T selector lever in R-position. (With A/T)
- Shift the shift lever in R-position. (With M/T)

– Check voltage between NAVI control unit harness connector M117 terminal 27and ground.

27 – Ground

R-position	**: Approx. 12 V**
Other than R-position	**: Approx. 0 V**

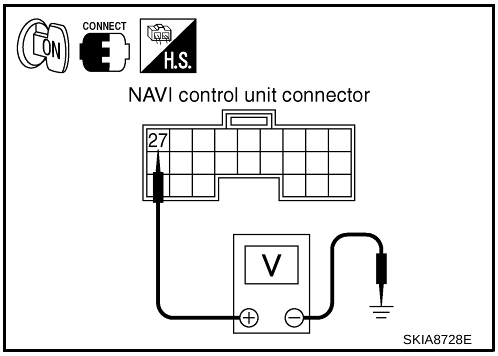

OK or NG

OK >> Inspection end
NG >> Repair harness or connector.

RGB Image Is Not Displayed

AKS00F8H

1. CHECK DISPLAY POWER SUPPLY AND GROUND CIRCUIT

Check system of power supply and ground circuit display.

OK or NG

OK >> GO TO 2.
NG >> Repair harness or connector of power supply and/or ground circuit.

2. CHECK NAVI CONTROL UNIT POWER SUPPLY AND GROUND CIRCUIT

1. Check system of power supply and ground circuit NAVI control unit.

OK or NG

OK >> GO TO 3.
NG >> Repair harness or connector of power supply and/or ground circuit.

3. CHECK HARNESS

1. Turn ignition switch OFF.
2. Disconnect NAVI control unit and display connectors.
3. Check continuity between NAVI control unit harness connector (A) M116 terminal 12 and display harness connector (B) M112 terminal 8.

12 – 8 **: Continuity should exist.**

4. Check continuity between NAVI control unit harness connector (A) M112 terminal 12 and ground.

12 – Ground **: Continuity should not exist.**

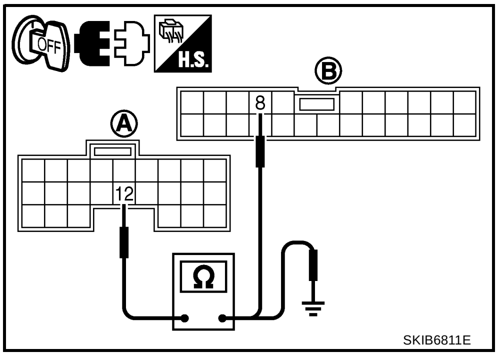

OK or NG

OK >> GO TO 4.
NG >> Repair harness or connector.

4. CHECK RGB AREA SIGNAL

1. Connect NAVI control unit and display connectors.
2. Turn ignition switch ON.
3. Press “INFO” switch.
4. Check the signal between NAVI control unit connector M116 terminal 12 and ground with CONSULT-II or oscilloscope.

12 – Ground :

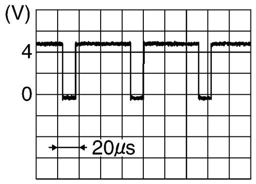

SKIB3600E

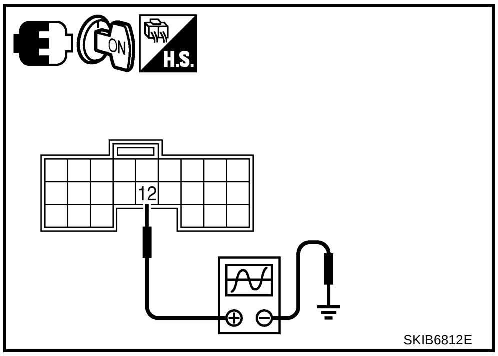

SKIB6812E

OK or NG

OK >> Replace display.
NG >> Replace NAVI control unit.

RGB Screen Is Rolling

AKS00F8I

1. CHECK RGB SYNCHRONIZING CIRCUIT

1. Turn the ignition switch OFF.
2. Disconnect NAVI control unit and display connectors.
3. Check continuity between NAVI control unit harness connector (A) M116 terminal 16 and display harness connector (B) M112 terminal 7.

16 – 7 : Continuity should exist.

4. Check continuity between NAVI control unit harness connector (A) M116 terminal 16 and ground.

16 – Ground : Continuity should not exist.

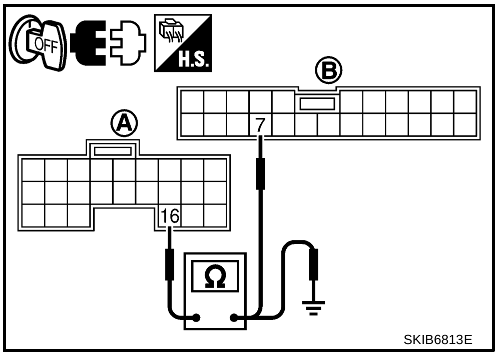

SKIB6813E

OK or NG

OK >> GO TO 2.
NG >> Repair harness or connector.

2. CHECK RGB SYNCHRONIZING SIGNAL

1. Connect NAVI control unit and display connectors.
2. Turn ignition switch ON.
3. Press the “MAP” switch.
4. Check the signal between NAVI control unit harness connector M116 terminal 16 and ground with CONSULT-II or oscilloscope.

16 – Ground :

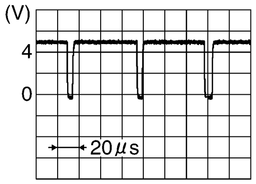

SKIB3603E

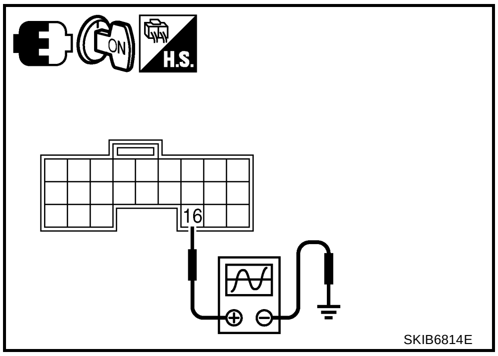

SKIB6814E

OK or NG

OK >> Replace display.
NG >> Replace NAVI control unit.

Color of RGB Image Is Not Proper

AKS00F8G

1. CHECK COLOR BAR DIAGNOSIS

Check color tone by “SCREEN ADJUSTMENT” of CONFIRMATION/ADJUSTMENT function.

OK or NG

OK >> INSPECTION END
NG >> GO TO 2.

2. CHECK RGB HARNESS

1. Turn ignition switch OFF.
2. Disconnect NAVI control unit and display connectors.
3. Check continuity as following.

- **When the screen looks bluish**
  Check continuity between NAVI control unit harness connector (A) M116 terminal 18 and display harness connector (B) M112 terminal 1.

  18 – 1 : Continuity should exist.

  Check continuity between NAVI control unit harness connector (A) M116 terminal 18 and ground.

  18 – ground : Continuity should not exist.

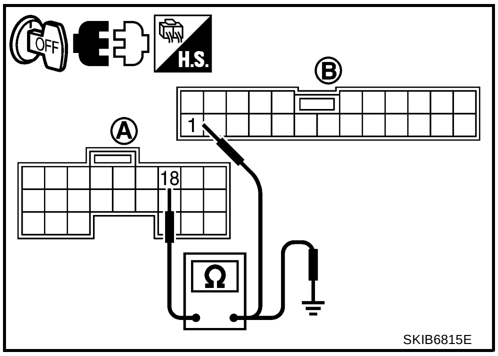

- **When the screen looks reddish**
  Check continuity between NAVI control unit harness connector (A) M116 terminal 21 and display harness connector (B) M112 terminal 2.

  21 – 2 : Continuity should exist.

  Check continuity between NAVI control unit harness connector (A) M116 terminal 21 and ground.

  21 – Ground : Continuity should not exist.

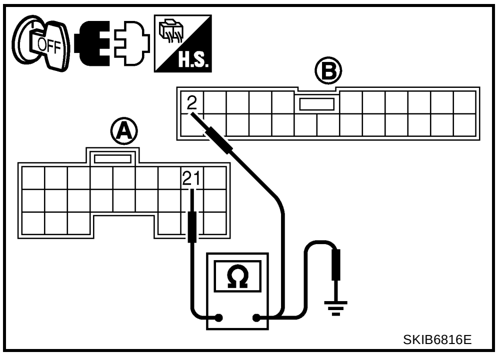

- **When the screen looks yellowish**
  Check continuity between NAVI control unit harness connector (A) M116 terminal 15 and display harness connector (B) M112 terminal 3.

  15 – 3 : Continuity should exist.

  Check continuity between NAVI control unit harness connector (A) M116 terminal 15 and ground.

  15 – Ground : Continuity should not exist.

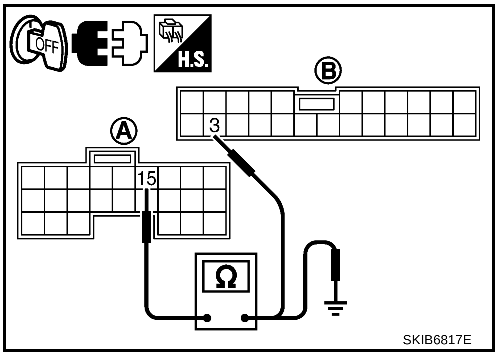

OK or NG

OK >> GO TO 3.
NG >> Repair harness or connector.

3. CHECK RGB SIGNAL

1. Connect NAVI control unit and display connectors.
2. Turn ignition switch ON.
3. Display “Color bar” by “CONFIRMATION/ADJUSTMENT” mode.

- **When the screen looks bluish**
  Check the signal between NAVI control unit connector M116 terminal 18 and 17 with CONSULT-II or oscilloscope.

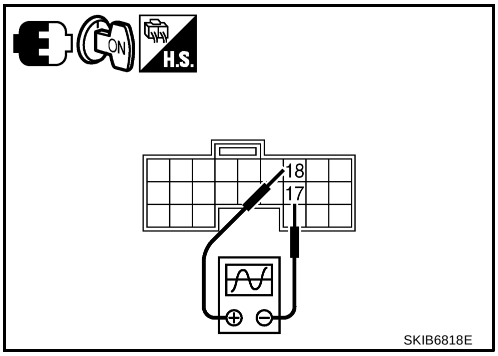

18 – 17 :

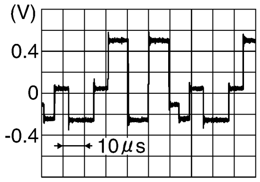

SKIB3604E

- **When the screen looks reddish**
  Check the signal between NAVI control unit connector M116 terminal 21 and 17 with CONSULT-II or oscilloscope.

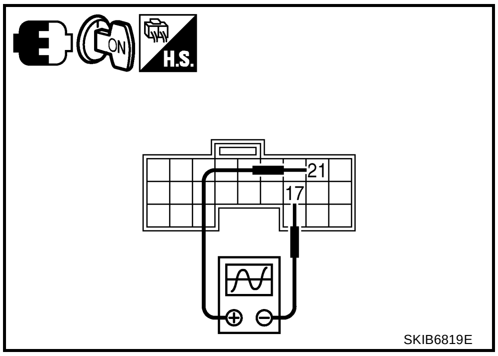

21 – 17 :

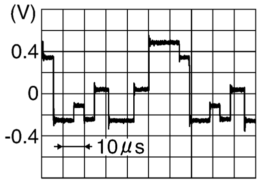

SKIB3605E

- **When the screen looks yellowish**
  Check the signal between NAVI control unit connector M116 terminal 15 and 17with CONSULT-II or oscilloscope.

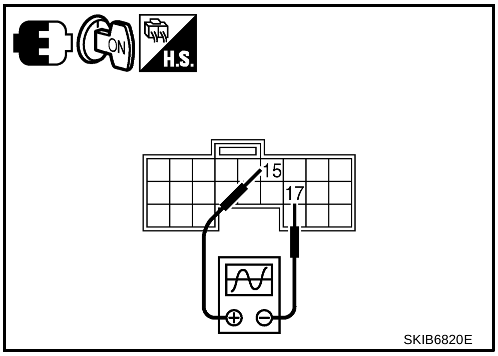

15 – 17 :

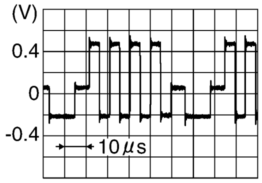

SKIB3602E

<u>OK or NG</u>

OK >> Replace display.
NG >> Replace NAVI control unit.

Guide Sound Is Not Heard

AKS00F8J

1. CHECK VOICE GUIDANCE SETTING

- While driving in the dark pink route, voice guidance does not operate.

  NOTE:
  Voice guidance is only available at intersections that satisfy certain conditions. Therefore, guidance may not be given even when the route on the map changes direction.
- Is volume setting not switched ON?

YES or NO

YES >> GO TO 2.
NO >> Switch the setting ON and turn the volume up.

2. CHECK SELF–DIAGNOSIS

Perform self-diagnosis. Refer to AV-35, "Self-Diagnosis Mode" .

Is self-diagnosis result OK ?

YES >> GO TO 3.
NO >> Check applicable parts.

3. CHECK VOICE GUIDANCE CIRCUIT

1. Turn ignition switch OFF.
2. Disconnect NAVI control unit and transfer unit connectors.
3. Check continuity between NAVI control unit harness connector (A) M116 terminals 7, 8 and transfer unit harness connector (B) M111 terminals 8, 10.

   7 – 8 : Continuity should exist.
   8 – 10 : Continuity should exist.
4. Check continuity between NAVI control unit harness connector (A) M116 terminals 7, 8 and ground.

   7, 8 – Ground : Continuity should not exist.

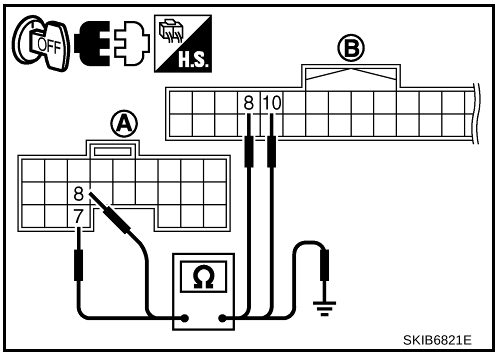

SKIB6821E

OK or NG

OK >> GO TO 4.
NG >> Repair harness or connector.

4. CHECK VOICE GUIDANCE SIGNAL (NAVI CONTROL UNIT)

1. Connect NAVI control unit and transfer unit connectors.
2. Turn ignition switch ON.
3. Press “VOICE” switch.
4. Check the signal between NAVI control unit harness connector M116 terminal 7 and 8 with CONSULT-II or oscilloscope.

7 – 8 :

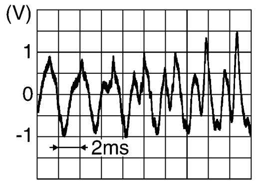

SKIB3609E

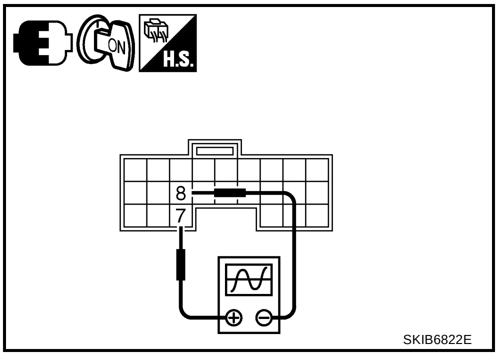

SKIB6822E

OK or NG

OK >> GO TO 5.
NG >> Replace NAVI control unit.

5. CHECK VOICE CHANGE RELAY CIRCUIT 1

1. Turn ignition switch OFF.
2. Disconnect transfer unit and voice change relay connectors.
3. Check continuity between transfer unit harness connector (A) M111 terminals 1, 2 and voice change relay harness connector (B) M104 terminals 6, 7.

1 – 6 : Continuity should exist.
2 – 7 : Continuity should exist.

4. Check continuity between transfer unit harness connector (A) M111 terminals 1, 2 and ground.

1, 2 – Ground : Continuity should not exist.

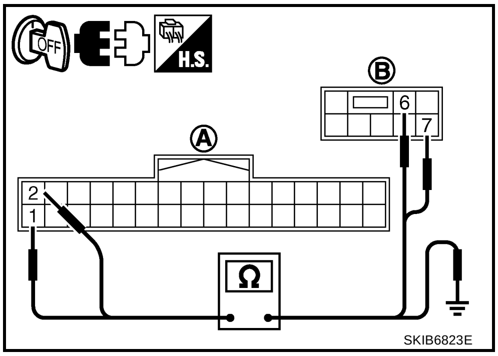

SKIB6823E

OK or NG

OK >> GO TO 6.
NG >> Repair harness or connector.

6. CHECK VOICE GUIDANCE SIGNAL (TRANSFER UNIT)

1. Connect transfer unit and voice change relay connectors.
2. Turn ignition switch ON.
3. Press “VOICE” switch.
4. Check the signal between transfer unit harness connector M111 terminals 1 and 2 with CONSULT-II or oscilloscope.

1 – 2 :

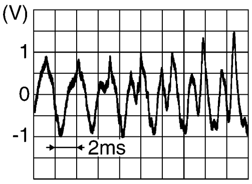

SKIB3609E

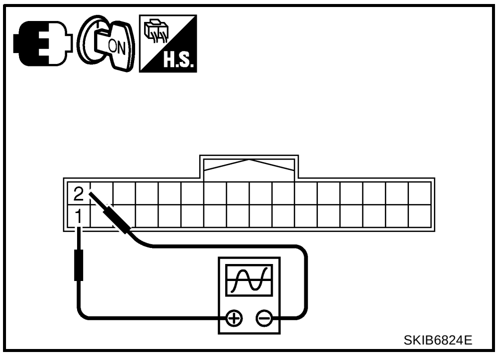

SKIB6824E

OK or NG

OK >> GO TO 7.
NG >> Replace transfer unit.

7. CHECK VOICE CHANGE RELAY CIRCUIT 2

1. Turn ignition switch OFF.
2. Disconnect transfer unit and voice change relay connectors.
3. Check continuity between transfer unit harness connector (A) M111 terminals 6, 4 and voice change relay harness connector (B) M104 terminals 2, 1.

6 – 2 : Continuity should exist.
4 – 1 : Continuity should exist.

4. Check continuity between transfer unit harness connector M111 terminals 6, 4 and ground.

6, 4 – Ground : Continuity should not exist.

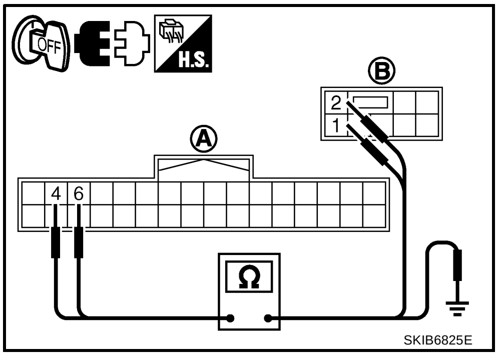

SKIB6825E

OK or NG

OK >> GO TO 8.
NG >> Repair harness or connector.

8. CHECK VOICE CHANGE RELAY ON SIGNAL

1. Connect transfer unit and voice change relay connectors.
2. Turn ignition ON.
3. Press “VOICE” switch.
4. Check voltage between transfer unit harness connector M111 terminal 6 and 4.

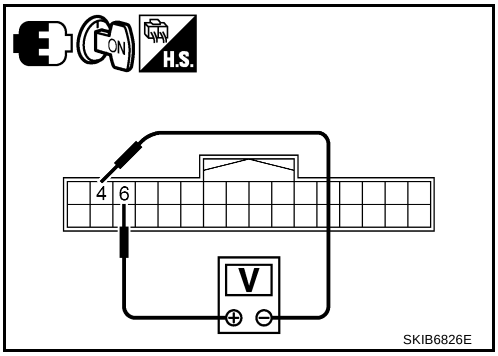

6 – 4 : Approx. 5 V

OK or NG

OK >> Replace voice change relay.
NG >> Replace transfer unit.

NAVI Switch Cannot Be Operated

AKS00FC8

1. CHECK NAVI SWITCH POWER SUPPLY AND GROUND CIRCUIT

Check system of power supply and ground circuit NAVI switch.

OK or NG

OK >> GO TO 2.
NG >> Repair harness or connector of power supply and/or ground circuit.

2. CHECK HARNESS (BETWEEN NAVI SWICH AND DISPLAY)

1. Turn ignition switch OFF.
2. Disconnect display and NAVI switch connectors.
3. Check continuity between display harness connector (A) M112 terminals 16, 15 and NAVI switch harness connector (B) M113 terminals 4, 5.

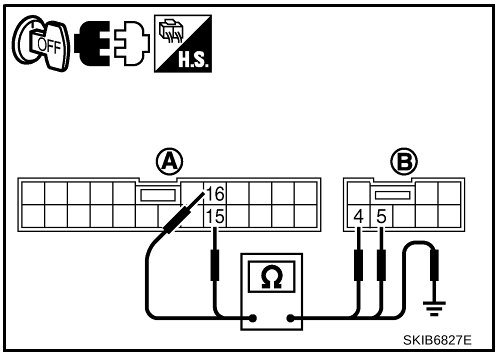

16 – 4 : Continuity should exist.

15 – 5 : Continuity should exist.

4. Check continuity between display harness connector (A) M112 terminals 16, 15 and ground.

16, 15 – Ground : Continuity should not exist.

OK or NG

OK >> GO TO 3.
NG >> Repair harness or connector.

3. CHECK HARNESS (BETWEEN NAVI CONTROL UNIT AND DISPLAY)

1. Disconnect NAVI control unit and display connectors.
2. Check continuity between NAVI control unit harness connector (A) M117 terminals 44, 45 and display harness connector (B) M112 terminals 13, 12.

44 – 13 : Continuity should exist.
45 – 12 : Continuity should exist.

3. Check continuity between NAVI control unit harness connector (A) M117 terminals 44, 45 and ground.

44, 45 – Ground : Continuity should not exist.

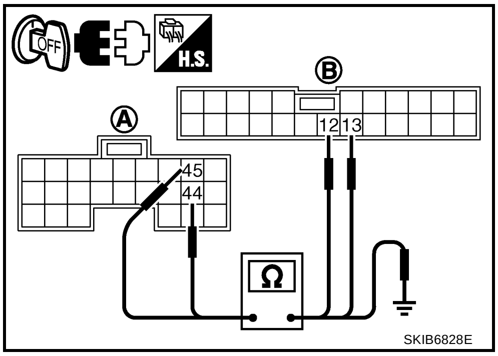

OK or NG

OK >> GO TO 4.
NG >> Repair harness or connector.

4. CHECK NAVI SWITCH

Replace normal NAVI switch and recheck the symptom.

Is the function normal?

YES >> Replace NAVI switch.
NO >> GO TO 5.

5. CHECK DISPLAY

Replace normal display and recheck the symptom.

Is the function normal?

YES >> Replace display.
NO >> Replace NAVI control unit.

Example of Symptoms Judged Not Malfunction

AKS00F8L

BASIC OPERATIONS

Symptom	Possible cause	Remedy
No image comes on.	The brightness adjustment is at the lowest setting.	Adjust to brighter setting.
No map comes on the screen.	No map DVD-ROM is inserted, or it is inserted upside down.	Insert the DVD-ROM correctly.
	The map display mode is switched off.	Press the “MAP” button.
No voice guidance is available. The volume is not high enough.	The volume is not set correctly or it is turned off.	Adjust the volume correctly.
The screen is too dim. The movement is slow.	The temperature in the vehicle is low.	Wait for the temperature to rise.
There are darker or brighter dots in the display.	It is inherent to liquid crystal display.	This is not malfunction.

VEHICLE MARKS

Symptom	Possible cause	Remedy
The location names differ between PLAN VIEW and BIRDVIEW® .	This is because the displayed information is reduced so that the screen does not become too crowded. There is also a chance that names of the roads or locations will be repeatedly displayed. The name appearing on the screen may be different because of the processing procedure.	It should not be regarded as malfunction.
The vehicle mark is not positioned correctly.	The vehicle might have moved with the ignition off, for example on a ferry boat or car transporter.	Drive the vehicle with GPS on for some distance.
The screen does not switch to night mode even after turning the headlights on.	The last time the lights were turned on, the setting was in daytime mode.	Turn the headlights on again, go to DISPLAY SETTINGS screen and set it to the night mode.
The map does not scroll even when the vehicle is traveling.	The display is not switched to the map screen.	Press the “MAP” button.
The vehicle mark does not show up.	The display is not switched to the map screen.	Press the “MAP” button.
GPS indicator on the screen remains gray.	GPS signals are not received because the vehicle is indoors or in the shade of buildings.	Move the vehicle outdoors with a clear view of the sky.
	GPS satellites are in poor locations.	Wait for the satellites to move to better locations.
The location of the vehicle mark does not match the actual position.	Driving on slippery road surface	If the vehicle mark does not move to the correct position even after the vehicle has been driven for approximately 10 km (6 miles), adjust the current location. If necessary, adjust the moving speed of the vehicle.
	Driving on slanted area	
	Rough or violent driving.	If the position maker does not move to the correct position even after the vehicle has been driven for approximately 10 km (6 miles), adjust the current location.
	GPS indicator remains gray.	Please check the GPS indicator on the screen to see if it remains gray.
	Errors (gain or loss) result in calculating the speed from the speed pulse because the vehicle has tire chains on, or the system was transferred to a different vehicle.	It will move by driving the vehicle for 30 minutes [in case it is running at 30 km/h (19 MPH)]. If you still notice errors, adjust moving speed.
	The map data has an error or is incomplete (if the location error always happens in the same area).	Please wait for the updated Map.

MAP DVD-ROM

Symptom	Possible cause	Remedy
The message “Error” appears after operation.	Map DVD-ROM is soiled or partially damaged.	Check the DVD-ROM and wipe it clean with a soft cloth.
		In case you see any damage, replace the DVD-ROM.

DESTINATION, WAY POINTS OR MENU CONTENTS CANNOT BE CHOSEN OR SET

Symptom	Possible cause	Remedy
Turn list is not displayed.	Route calculation has not yet been requested.	Set the destination and request route calculation.
	The vehicle mark is not on the suggested route.	Please drive the vehicle along the suggested route.
	Route guidance is off.	Turn the route guidance on.
In re-routing, the way points are not included in the calculation.	The system has judged that the vehicle has already passed the point.	If you want to go to that point again, edit the route again.
Route information is not displayed.	Route calculation has not yet been requested.	Set the destination and request route calculation.
	The vehicle mark is not on the suggested route.	Please drive the vehicle along the suggested route.
	Route guidance is off.	Turn the route guidance on.
Route is not calculated automatically.	The vehicle is not running on a route that can be calculated from.	Enter the route that can be calculated from. Alternatively, you can calculate the route manually. In this case, the entire route will be calculated again.
It is impossible to request a detour.	Your vehicle is not running on the suggested route.	Restart route calculation or join the suggested route.
The detour found is the same as the previous suggestion.	The system took many conditions into consideration, but the same result was obtained.	This is not malfunction.
It is impossible to set the way-points.	The number of way points exceeds 5.	It is impossible to set more than 5 way points. Please divide them in groups to find them all.

VOICE GUIDANCE

Symptom	Possible cause	Remedy
The voice guidance is not available.	Voice guidance is only available at intersections that satisfy certain conditions. Therefore,guidance may not be given even when the route on the map changes direction.	System is not malfunction.
	The vehicle is off the suggested route.	Return to the recommended route or re-search the route.
	Voice guidance is set off.	Turn the voice guidance on.
	Route guidance is set off.	Turn the route guidance on.
The guidance content does not correspond to the actual condition.	The content of the voice guidance may vary, depending on the types of junctions to make turns on.	Follow the actual rules and regulations.

ROUTE CALCULATION

Symptom	Possible cause	Remedy
Although the system is set with the moving direction as the preference, it does not find the route by matching the preference.	There is no route found in that direction.	This is not malfunction.
Route is not indicated.	There is no road close to the destination that can be found by this system.	Reset the destination close to the road displayed with orange, or wider ones. Especially with roads which have separate lanes for opposite directions, be careful in setting the destination or way points on it, as results may differ depending on the lane you choose.
	The starting point to the destination is too close.	Set more distant destinations.
The route is not displayed continuously at way points that are for example not calculated routes from the vehicle's current position.	Suggested routes may be displayed discontinuously near way points as route calculation is done at each way point.	This is not malfunction.
The suggested route the vehicle has travelled is erased.	Suggested routes are stored in memory by the blocks; if the vehicle travels past way point 1, the former data will be erased.	This is not malfunction.
A very detoured route is suggested.	If there are restrictions (such as one-way traffic) on roads close to the starting point or destination, the system may suggest a detoured route.	Try slightly moving the starting point or destination.
The landmark description does not correspond to the actual one.	It may be caused by insufficient or incorrect data on the DVD-ROM.	Please wait for the update Map DVD-ROM.
The suggested route does not exactly connect to the starting point, way points, or destination.	There is no data for route calculation closer to these points.	Set these points on the main road displayed in thick orange. Please note that in some cases even main roads lack the data for route calculation.

NOTE:

- Except for the ordinance-designated cities and the prefectural capitals. (Applicable areas may be changed in the updated map disc.)
- Route calculation may not be available for insufficient roadways` improvement in the 13 states of Canada.

EXAMPLES OF VEHICLE MARK DISPLACEMENT

Vehicle's travel amount is calculated by reading its travel distance and turning angle. Therefore, if the vehicle is driven in the following manner, an error will occur in the vehicle's current location display. If correct location has not been restored after driving the vehicle for a while, perform location correction.

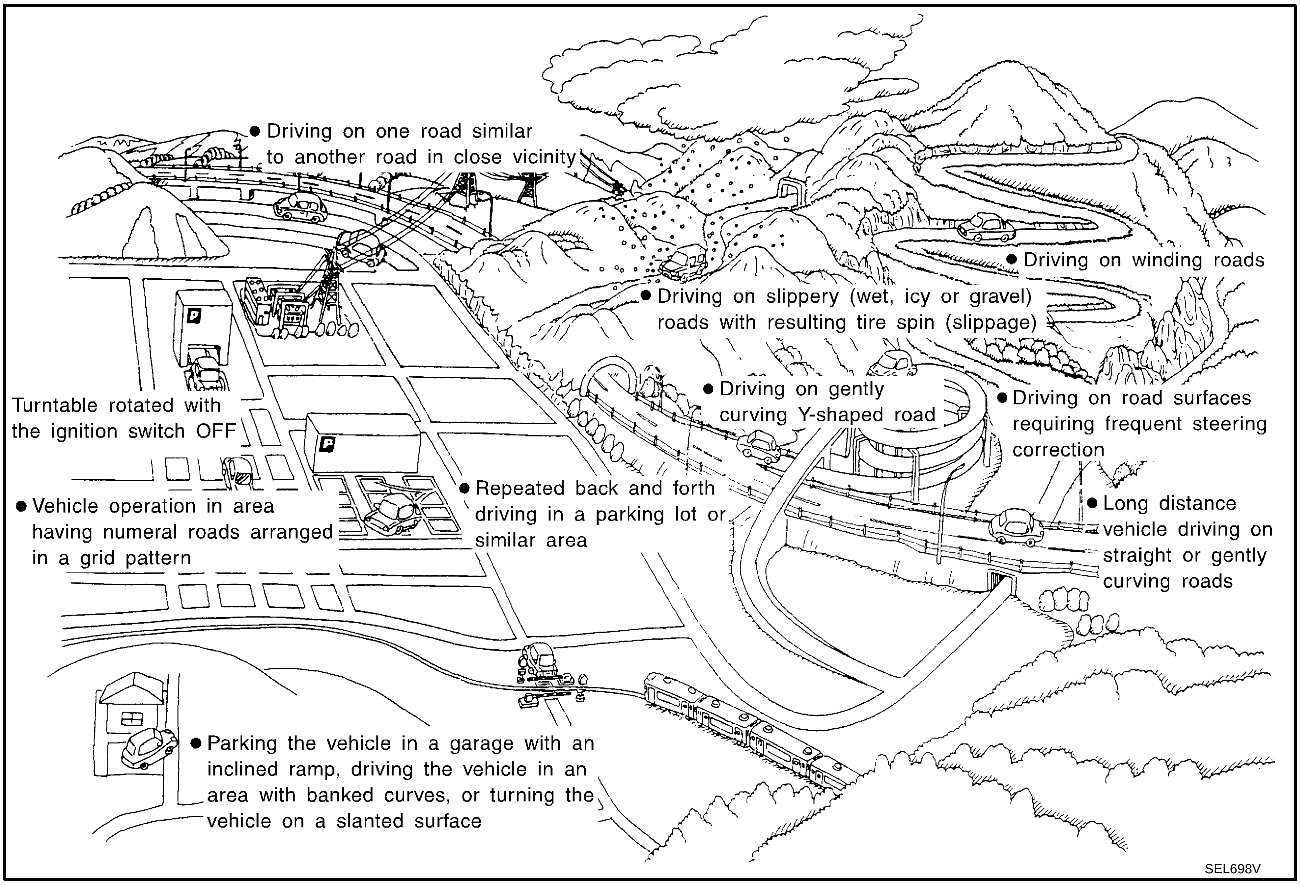

Cause (condition)		Driving condition	Remarks (correction, etc.)
Road configura- tion	Y–intersections 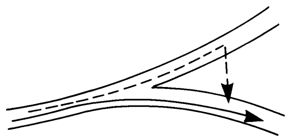 ELK0192D	At a Y intersection or similar gradual division of roads, error the direction of travel deduced by the sensor may result in the vehicle mark appearing on the wrong road.	If after traveling about 10 km (6 miles) the correct location has not been restored, perform location correction, and if necessary, direction correction.
	Spiral roads 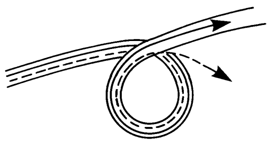 ELK0193D	When driving on a large, continuous spiral road (such as loop bridge), turning angle error is accumulated and the vehicle mark may deviate from the correct location.	
	Straight roads 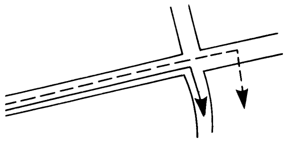 ELK0194D	When driving on a long, straight road and slow curve without stopping, map-matching does not work effectively enough and distance errors may accumulate. As a result, the vehicle mark may deviate from the correct location when the vehicle turned at a corner.	
	Zigzag roads 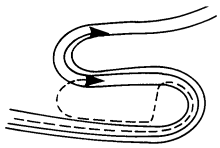 ELK0195D	When driving on a zigzag road, the map may be matched to other roads in the similar direction nearby at every turn, and the vehicle mark may deviate from the correct location.	
	Roads laid out in a grid pattern 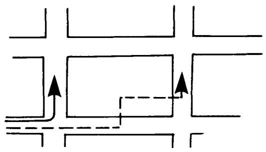 ELK0196D	When driving at where roads are laid out in a grid pattern, where many roads are running in the similar direction nearby, the map may be matched to them by mistake and the vehicle mark may deviate from the correct location.	
	Parallel roads 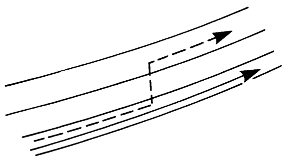 ELK0197D	When two roads are running in parallel (such as highway and sideway), the map may be matched to the other road by mistake and the vehicle mark may deviate from the correct location.	

Cause (condition)		Driving condition	Remarks (correction, etc.)
Place	In a parking lot 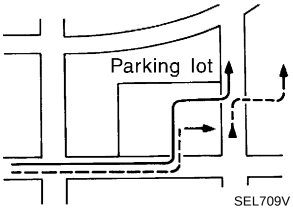 SEL709V	When driving in a parking lot, or other location where there are no roads on the map, matching may place the vehicle mark on a nearby road. When the vehicle returns to the road, the vehicle mark may have deviated from the correct location. When driving in circle or turning the steering wheel repeatedly, direction errors accumulate, and the vehicle mark may deviate from the correct location.	
	Turntable 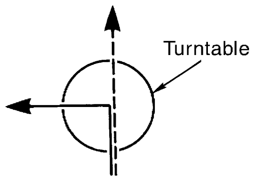 SEL710V	When the ignition switch is off, the navigation system cannot get the signal from the gyroscope (angular speed sensor). Therefore, the displayed direction may be wrong and the correct road may not be easily returned to after rotating the vehicle on a turntable with the ignition off.	
	Slippery roads	On snow, wet roads, gravel, or other roads where tires may slip easily, accumulated mileage errors may cause the vehicle mark to deviate from the correct road.	If after traveling about 10km (6miles) the correct location has not been restored, perform location correction and, if necessary, direction correction.
	Slopes	When parking in sloped garages, when traveling on banked roads, or in other cases where the vehicle turns when tilted, an error in the turning angle will occur, and the vehicle mark may deviate from the road.	
Map data	Road not displayed on the map screen 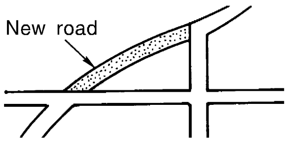 SEL699V	When driving on new roads or other roads not displayed on the map screen, map matching does not function correctly and matches the location to a nearby road. When the vehicle returns to a road which is on the map, the vehicle mark may deviate from the correct road.	
	Different road pattern (Changed due to repair) 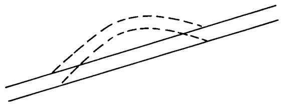 ELK0201D	If the road pattern stored in the map data and the actual road pattern are different, map matching does not function correctly and matches the location to a nearby road. The vehicle mark may deviate from the correct road.	
Vehicle	Use of tire chains	When tire chains are used, the mileage is not correctly detected, and the vehicle mark may deviate from the correct road.	Drive the vehicle for a while. If the distance is still deviated, adjust it by using the distance adjustment function. (If the tire chain is removed, recover the original value.)

Cause (condition)		Driving condition	Remarks (correction, etc.)
Precautions for driving	Just after the engine is started	If the vehicle is driven off just after the engine is started when the gyroscope (angular speed sensor) correction is not completed, the vehicle can lose its direction and may have deviated from the correct location.	Wait for a short while before driving after starting the engine.
	Continuous driving without stopping	When driving long distances without stopping, direction errors may accumulate, and the vehicle mark may deviate from the correct road.	Stop and adjust the orientation.
	Abusive driving	Spinning the wheels or engaging in other kinds of abusive driving may result in the system being unable perform correct detection, and may cause the vehicle mark to deviate from the correct road.	If after traveling about 10 km (6 miles) the correct location has not been restored, perform location correction and, if necessary, direction correction.
How to correct location	Position correction accuracy 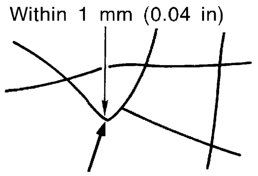 SEL701V	If the accuracy of location settings is poor, accuracy may be reduced when the correct road cannot be found, particularly in places where there are many roads.	Enter in the road displayed on the screen with an accuracy of approx. 1mm. Caution: Whenever possible, use detailed map for the correction.
	Direction when location is corrected 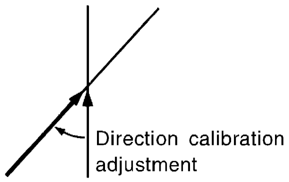 SEL702V	If the accuracy of location settings during correction is poor, accuracy may be reduced afterwards.	Perform direction correction.

VEHICLE MARK SHOWS A POSITION WHICH IS COMPLETELY WRONG

In the following cases, the vehicle mark may appear on completely different position in the map depending on the GPS satellite signal receiving conditions. In this case, perform location correction and direction correction.

- When location correction has not been done
  - If the receiving conditions of the GPS satellite signal is poor, if the vehicle mark becomes out of place, it may move to a completely different location and not come back if location correction is not done. The position will be corrected if the GPS signal can be received.
- When the vehicle has traveled by ferry, or when the vehicle has been being towed
  - Because calculation of the current location cannot be done when traveling with the ignition off, for example when traveling by ferry or when being towed, the location before travel is displayed. If the precise location can be detected with GPS, the location will be corrected.

VEHICLE MARK JUMPS

In the following cases, the vehicle mark may appear to jump as a result of automatic correction of the current location.

- When map matching has been done
  - If the current location and the vehicle mark are different when map matching is done, the vehicle mark may seem to jump. At this time, the location may be “corrected” to the wrong road or to a location which is not on a road.
- When GPS location correction has been done
  - If the current location and the vehicle mark are different when the location is corrected using GPS measurements, the vehicle mark may seem to jump. At this time, the location may be “corrected” to a location which is not on a road.

VEHICLE MARK IS IN A RIVER OR SEA

The navigation system moves the vehicle mark with no distinction between land and rivers or sea. If the vehicle mark is somehow out of place, it may appear that the vehicle is driving in a river or sea.

VEHICLE MARK AUTOMATICALLY ROTATES

The system wrongly memorizes the rotating status as stopping when the ignition switch is turned ON with the turntable rotating. That causes the vehicle mark to rotate when the vehicle is stopped.

WHEN DRIVING ON SAME ROAD, SOMETIMES VEHICLE MARK IS IN RIGHT PLACE AND SOMETIMES IT IS WRONG PLACE

The conditions of the GPS antenna (GPS data) and gyroscope (angular speed sensor) change gradually. Depending on the road traveled and the operation of the steering wheel, the location detection results will be different. Therefore, even on a road on which the location has never been wrong, conditions may cause the vehicle mark to deviate.

LOCATION CORRECTION BY MAP-MATCHING IS SLOW

- The map–matching function needs to refer to the data of the surrounding area. It is necessary to drive some distance for the function to work.
- Because map–matching operates on this principle, when there are many roads running in similar directions in the surrounding area, no matching determination may be made. The location may not be corrected until some special feature is found.

ALTHOUGH GPS RECEIVING DISPLAY IS GREEN, VEHICLE MARK DOES NOT RETURN TO CORRECT LOCATION

- The GPS accuracy has an error of approximately 10 m (30 ft). In some cases the vehicle mark may not be on the correct street, even when GPS location-correction is done.
- The navigation system compares the results of GPS location detection with the results from map-matching location detection. The one which is determined to have higher accuracy is used.
- GPS location correction may not be performed when the vehicle is stopped.

NAME OF CURRENT PLACE IS NOT DISPLAYED

The current place name may not be displayed if there are no place names displayed on the map screen.

CONTENTS OF DISPLAY DIFFER FOR BIRDVIEW® AND THE (FLAT) MAP SCREEN

Difference of the BIRDVIEW® Screen From the Flat Map Screen Are As Follows

- The current place name displays names which are primarily in the direction of vehicle travel.
- The amount of time before the vehicle travel or turn angle is updated on the screen is longer than for the (flat) map display.
- The conditions for display of place names, roads, and other data are different for nearby areas and for more distant areas.
- Some thinning of the character data is done to prevent the display becoming to complex. In some cases and in some locations, the display contents may differ.
- The same place name, street name, etc. may be displayed multiple times.

Program Loading

AKS00F8M

NOTE:
Program loading is operated when the version of software is upgraded to the latest one, or when language is switched.

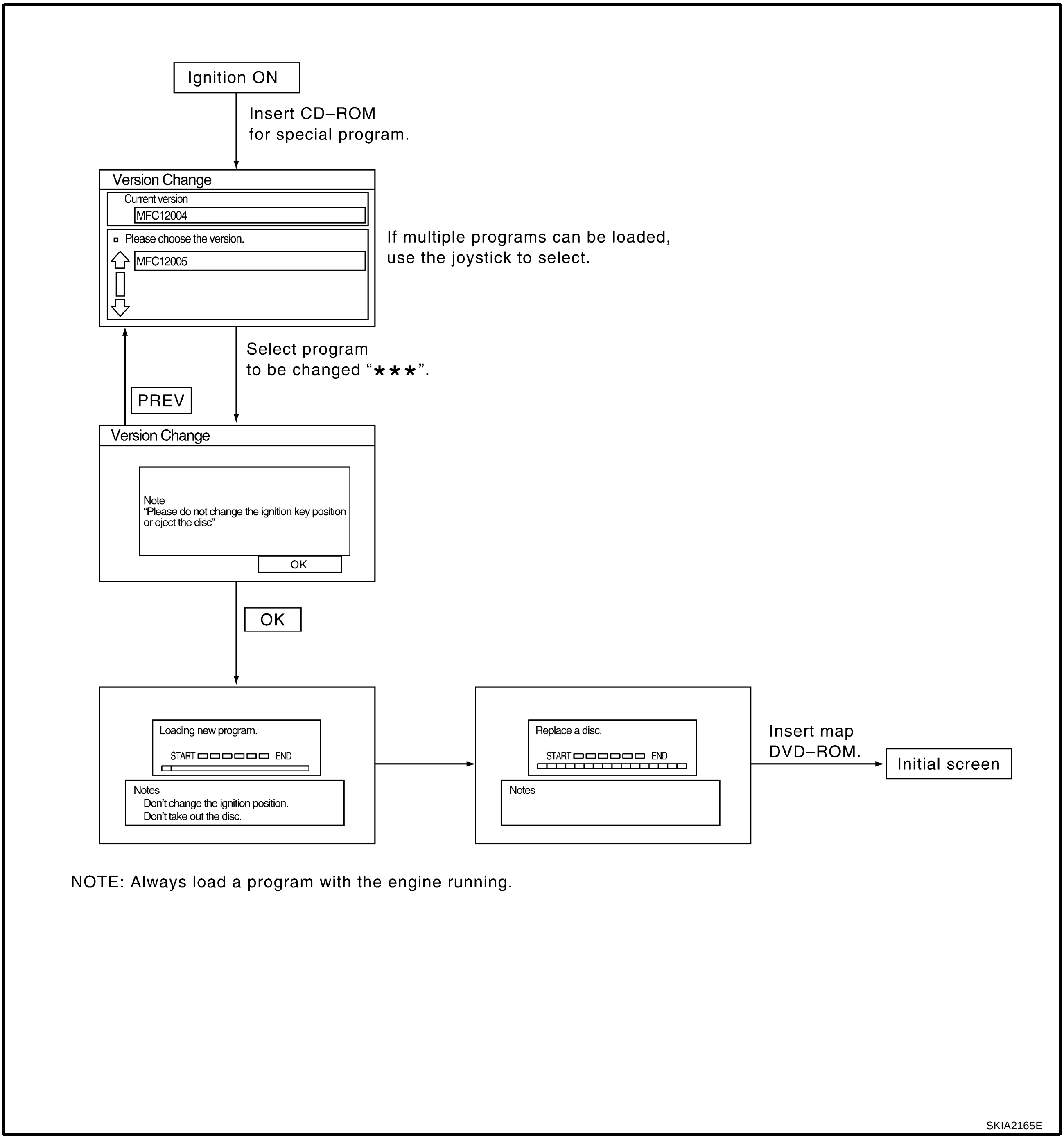

Removal and Installation of NAVI Control Unit

AKS00F8N

REMOVAL

1. Remove upper grove box. Refer to IP-11, "Removal and Installation" .
2. Remove screws, and remove NAVI control unit.

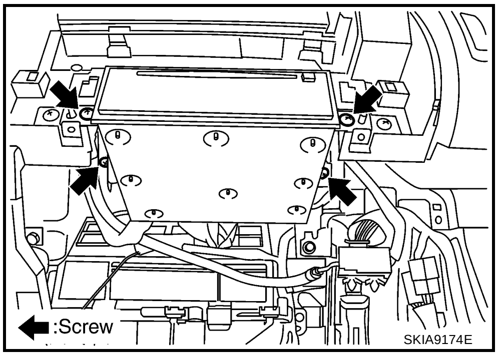

3. Remove screws and remove brackets.

INSTALLATION

Installation is the reverse order of removal.

Removal and Installation of GPS Antenna

AKS00F8O

REMOVAL

1. Remove cluster lid A. Refer to IP-11, "Removal and Installation" .
2. Remove screws, and remove GPS antenna.

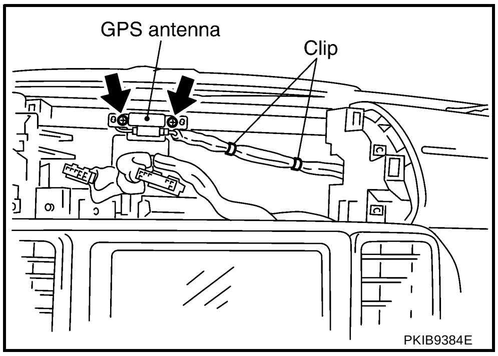

INSTALLATION

Installation is the reverse order of removal.

Removal and Installation of GPS Antenna Feeder
AKS00F8P

REMOVAL

1. Remove combination meter. Refer to IP-11, "Removal and Installation" .
2. Remove NAVI control unit. Refer to AV-63, "Removal and Installation of NAVI Control Unit" .
3. Remove front passenger air bag module. Refer to IP-11, "Removal and Installation" .

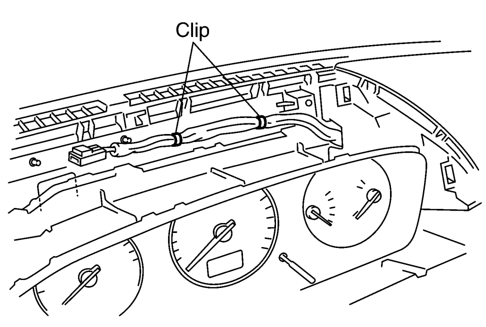

PKIB9385E

4. Remove clips, and remove GPS antenna feeder.

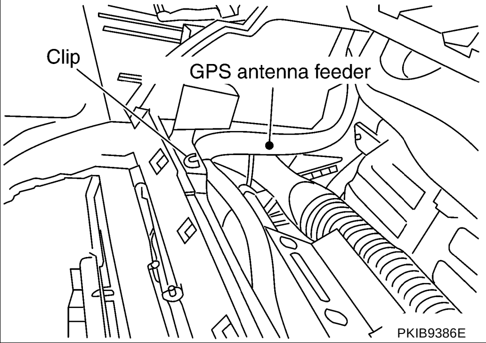

PKIB9386E

INSTALLATION

Installation is the reverse order of removal.

Removal and Installation of NAVI Switch
AKS00F8Q

REMOVAL

1. Remove cluster lid C. Refer to IP-11, "Removal and Installation" .
2. Remove screws, and remove NAVI switch.

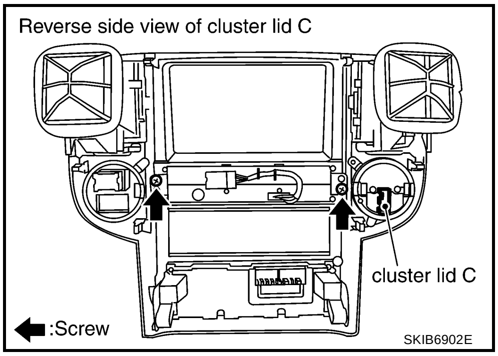

INSTALLATION

Installation is the reverse order of removal.

Removal and Installation of Display
AKS00F8R

REMOVAL

1. Remove cluster lid C. Refer to IP-11, "Removal and Installation" .
2. Remove screws, and remove display.
3. Remove screws, and remove brackets.

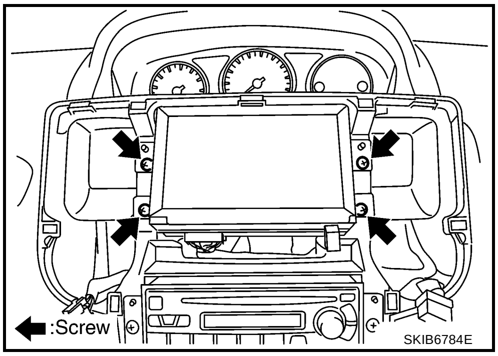

INSTALLATION

Installation is the reverse order of removal.

Removal and Installation of Transfer Unit
AKS00F8S

REMOVAL

1. Remove display. Refer toAV-65, "Removal and Installation of Display" .
2. Remove screws, and remove transfer unit.

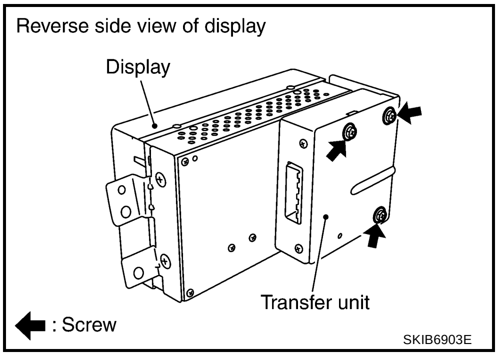

INSTALLATION

Installation is the reverse order of removal.

Removal and Installation of Voice Change Relay
AKS00F8U

REMOVAL

1. Remove instrument lower driver panel. Refer to IP-11, "Removal and Installation" .
2. Remove screw, and remove voice change relay.

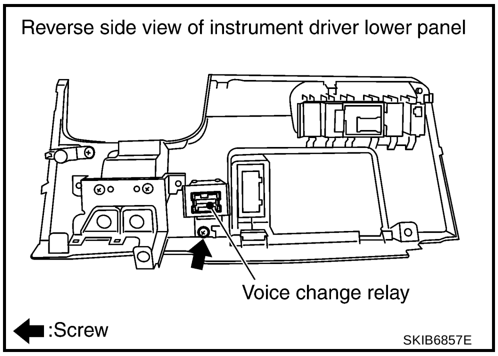

INSTALLATION

Installation is the reverse order of removal.